KS/JIS

STEEL BUTT WELDING PIPE FITTINGS

JINIL BEND VINA CO., LTD.

APPLICABLE SPECIFICATIONS

KS : KOREAN INDUSTRIAL STANDARDS

KS B 1543 Steel Butt-Welding Pipe Fittings.

JIS : JAPANESE INDUSTRIAL STANDARDS

JIS B 2311 Steel Butt-Welding Pipe Fittings for Ordinary use.
JIS B 2312 Steel Butt-Welding Pipe Fittings.
JIS B 2313 Steel Plate Butt-Welding Pipe Fittings.

ANSI : AMERICAN NATIONAL STANDARDS INSTITUTE

ANSI B 16.5 Pipe Flanges and Flanged Fittings.
ANSI B 16.9 Factory Made Wrought Steel Butt-Welding Fittings.
ANSI B 16.25 Butt-Welding Ends.
ANSI B 16.28 Wrought Steel Butt-Welding Short Radious Elbow and Returns.
ANSI B 36.10 Welded and Seamless Wrought Steel Pipe.
ANSI B 36.19 Staninless Steel Pipe.

JINIL BEND VINA

ASTM : AMERICAN SOCIETY FOR TESTING AND MATERIALS

ASTM A 105	Carbon steel forgings for piping Applications.
ASTM A 234	Piping Fittings of Wrought Carbon Steel and Alloy Steel for Moderate and High Temperature service.
ASTM A 403	Wrought Austenitic Stainless Steel Piping Fittings.
ASTM A 420	Piping Fittings of Wrought Carbon Steel and Alloy Steel for Low-Temperature Service.
ASTM A 815	Wrought Ferritic, Ferritic/Austenitic, and Martensitic Stainless Piping Fittings.

MSS : MANUFACTURERS STANDARDIZATION SOCIETY OF THE VALVE AND FITTINGS INDUSTRY

MSS SP-43	Wrought Stainless Steel Butt-Welding Fittings.
MSS SP-75	Specification for High Test Wrought Butt-Welding FIttings.
MSS SP-79	Sockel-Welding Reducer Inserts

BS : BRITISH STANDARDS

BS 1640	Steel Butt-Welding Pipe Fittings for the Petroleum Industry Part 1. Carbon and Ferritie Alloy Steel Fittings
BS 1965	Butt-Welding Pipe FIttings for Pressure Purposes. Part1. Carbon Steel & Part2. Austenitic Stainless Steel.

API : AMERICAN PETROLEUM INSTITUTE

API 5L	Seamless and Welded Steel Line-Pipe
API 5LX	Seamless and Welded High-Test Line Pipes

JINIL BEND VINA

CERTIFICATE

CERTIFICATE STANDARS

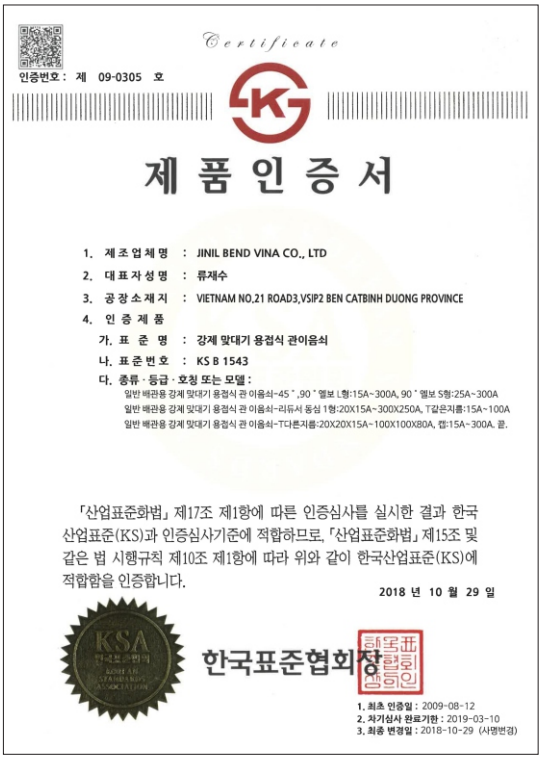

Certificate

인증번호 : 제 09-0305 호

제 품 인 증 서

1. 제조업체명 : JINIL BEND VINA CO., LTD
2. 대표자성명 : 류재수
3. 공장소재지 : VIETNAM NO.21 ROAD3,VSIP2 BEN CATBINH DUONG PROVINCE
4. 인 증 제 품
   가. 표 준 명 : 강제 맞대기 용접식 관이음쇠
   나. 표준번호 : KS B 1543
   다. 종류 · 등급 · 호칭 또는 모델 :
   일반 배관용 강제 맞대기 용접식 관 이음쇠-45˚,90˚ 엘보 L형:15A~300A, 90˚ 엘보 S형:25A~300A
   일반 배관용 강제 맞대기 용접식 관 이음쇠-리듀서 동심 1형:20X15A~300X250A, T 감은지름:15A~100A
   일반 배관용 강제 맞대기 용접식 관 이음쇠-T다른지름-20X20X15A~100X100X80A, 캡:15A~300A. 끝.

「산업표준화법」 제17조 제1항에 따른 인증심사를 실시한 결과 한국산업표준(KS)과 인증심사기준에 적합하므로, 「산업표준화법」 제15조 및 같은 법 시행규칙 제10조 제1항에 따라 위와 같이 한국산업표준(KS)에 적합함을 인증합니다.

2018 년 10 월 29 일

한국표준협회장

1. 최초 인증일 : 2009-08-12
2. 차기심사 완료기한 : 2019-03-10
3. 최종 변경일 : 2018-10-29 (사명변경)

KS B 1543

Certificate of Registration

SPEC Society of Professional Engineers Certification

Quality Management System Certificate

Certificate No : QMS - 7038

Company Name : JINIL BEND VINA Co., Ltd.
No. 21VSIP II, Road No. 3, Vietnam - Singapore Industrial Park II, Binh Duong Industrial - Service - Urban Binh Duong, Hoa Phu Ward, Thu Dau Mot city, Binh Duong Province, Viet Nam

Scope of registration : Production and sales of steel butt-welding pipe fittings for ordinary use & fuel gas and grooved end pipe fittings

Standard : ISO 9001:2015

SPEC hereby certifies that the Quality Management System of the above organization has been assessed and found to meet the requirements of the standard and scope of registration detailed above.

Certificate From : 2018-07-31, Certificate Expiry : 2021-07-30
(Registration on 2009-06-25)
Reissue : Re-certificate
Issue date : 2018-07-31

Signed for and on behalf of SPEC
By authority of the Chief Executive

※ The Accreditation Mark indicates accreditation by KAB in respect of those activities covered by the accreditation certificated number KAB-QC-18

※ SPEC is accredited by Member(KAB) of the International Accreditation Forum Multilateral Recognition Arrangement for Quality Management Systems

IAF KAB KAB-QC-18

ISO 9001:2015

JIS MARK CERTIFICATE

Certification No. KSVN18017

JINIL BEND VINA Co., Ltd.

No.21 Road 3, VSIP II , Hoa Phu Ward Thu Dau Mot city, Binh Duong Province VIETNAM

Korean Standards Association hereby certifies the JIS Mark factory in accordance with the provision of Article 23 of the Japanese Industrial Standardization Law as follows

JIS NUMBER & TITLE

JIS B 2311 : Steel butt-welding pipe fittings for ordinary use

GRADE OR TYPE

[45E(L), 45E(S), 90E(L), 90E(S), R(C)1, R(C)2, R(E)1, R(E)2, T(S), T(R), C]
[SGP, PG370]

OTHERS

Certificate Valid Date : 11 August, 2018 ~ 10 August, 2021
· Original Certification Date : 11 August, 2018
· Date of Issue : 11 August, 2018

CHAIRMAN OF KSA

KOREAN STANDARDS ASSOCIATION
305, Teheran-Ro, Gangnam-Gu, Seoul, Korea

JIS B 2311

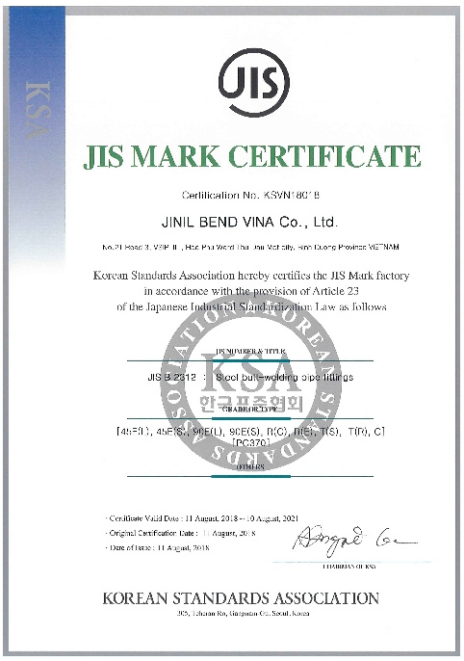

JIS MARK CERTIFICATE

Certification No. KSVN18018

JINIL BEND VINA Co., Ltd.

No.21 Road 3, VSIP II , Hoa Phu Ward Thu Dau Mot city, Binh Duong Province VIETNAM

Korean Standards Association hereby certifies the JIS Mark factory in accordance with the provision of Article 23 of the Japanese Industrial Standardization Law as follows

JIS NUMBER & TITLE

JIS B 2312 : Steel butt-welding pipe fittings

GRADE OR TYPE

[45E(L), 45E(S), 90E(L), 90E(S), R(C), R(E), T(S), T(R), C]
[PG370]

OTHERS

· Certificate Valid Date : 11 August, 2018 ~ 10 August, 2021
· Original Certification Date : 11 August, 2018
· Date of Issue : 11 August, 2018

CHAIRMAN OF KSA

KOREAN STANDARDS ASSOCIATION
305, Teheran-Ro, Gangnam-Gu, Seoul, Korea

JIS B 2312

JIS MARK CERTIFICATE

Certification No. KSVN18019

JINIL BEND VINA Co., Ltd.

No.21 Road 3, VSIP II , Hoa Phu Ward Thu Dau Mot city, Binh Duong Province VIETNAM

Korean Standards Association hereby certifies the JIS Mark factory in accordance with the provision of Article 23 of the Japanese Industrial Standardization Law as follows

JIS NUMBER & TITLE

JIS B 2313 : STEEL PLATE BUTT-WELDING PIPE FITTINGS

GRADE OR TYPE

[45E(L), 45E(S), 90E(L), 90E(S), R(C)1, R(C)2, R(E)1, R(E)2, T(S), T(R)]
[PG370W]

OTHERS

· Certificate Valid Date : 11 August, 2018 ~ 10 August, 2021
· Original Certification Date : 11 August, 2018
· Date of Issue : 11 August, 2018

CHAIRMAN OF KSA

KOREAN STANDARDS ASSOCIATION
305, Teheran-Ro, Gangnam-Gu, Seoul, Korea

JIS B 2313

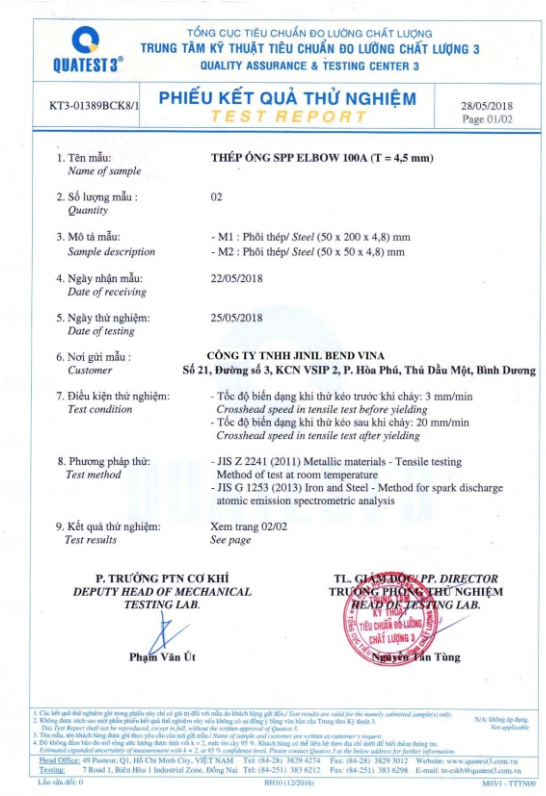

TỔNG CỤC TIÊU CHUẨN ĐO LƯỜNG CHẤT LƯỢNG
TRUNG TÂM KỸ THUẬT TIÊU CHUẨN ĐO LƯỜNG CHẤT LƯỢNG 3
QUALITY ASSURANCE & TESTING CENTER 3

KT3-01389BCK8/1 **PHIẾU KẾT QUẢ THỬ NGHIỆM** / *TEST REPORT* 28/05/2018 Page 01/02

1. Tên mẫu / *Name of sample*: **THÉP ỐNG SPP ELBOW 100A (T = 4,5 mm)**
2. Số lượng mẫu / *Quantity*: 02
3. Mô tả mẫu / *Sample description*: - M1 : Phôi thép/ *Steel* (50 x 200 x 4,8) mm; - M2 : Phôi thép/ *Steel* (50 x 50 x 4,8) mm
4. Ngày nhận mẫu / *Date of receiving*: 22/05/2018
5. Ngày thử nghiệm / *Date of testing*: 25/05/2018
6. Nơi gửi mẫu / *Customer*: **CÔNG TY TNHH JINIL BEND VINA** **Số 21, Đường số 3, KCN VSIP 2, P. Hòa Phú, Thủ Dầu Một, Bình Dương**
7. Điều kiện thử nghiệm / *Test condition*: - Tốc độ biến dạng khi thử kéo trước khi chảy: 3 mm/min *Crosshead speed in tensile test before yielding* - Tốc độ biến dạng khi thử kéo sau khi chảy: 20 mm/min *Crosshead speed in tensile test after yielding*
8. Phương pháp thử / *Test method*: - JIS Z 2241 (2011) Metallic materials - Tensile testing Method of test at room temperature - JIS G 1253 (2013) Iron and Steel - Method for spark discharge atomic emission spectrometric analysis
9. Kết quả thử nghiệm / *Test results*: Xem trang 02/02 / *See page*

P. TRƯỞNG PTN CƠ KHÍ / *DEPUTY HEAD OF MECHANICAL TESTING LAB.* — **Phạm Văn Út**

TL. GIÁM ĐỐC / *PP. DIRECTOR* **TRƯỞNG PHÒNG THỬ NGHIỆM** / *HEAD OF TESTING LAB.* — **Nguyễn Tấn Tùng**

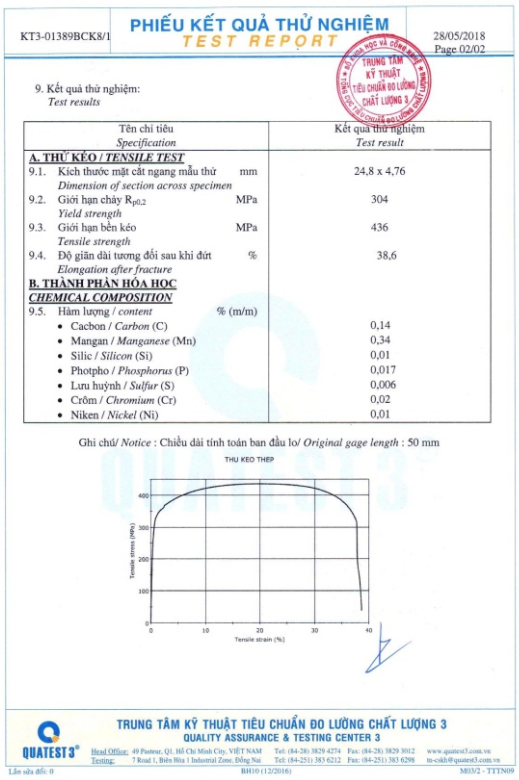

KT3-01389BCK8/1 **PHIẾU KẾT QUẢ THỬ NGHIỆM** / *TEST REPORT* 28/05/2018 Page 02/02

9. Kết quả thử nghiệm / *Test results*

Tên chỉ tiêu *Specification*		Kết quả thử nghiệm *Test result*
A. THỬ KÉO / *TENSILE TEST*		
9.1. Kích thước mặt cắt ngang mẫu thử *Dimension of section across specimen*	mm	24,8 x 4,76
9.2. Giới hạn chảy $R_{p0,2}$ *Yield strength*	MPa	304
9.3. Giới hạn bền kéo *Tensile strength*	MPa	436
9.4. Độ giãn dài tương đối sau khi đứt *Elongation after fracture*	%	38,6
B. THÀNH PHẦN HÓA HỌC ***CHEMICAL COMPOSITION***		
9.5. Hàm lượng / *content*	% (m/m)	
• Cacbon / *Carbon* (C)		0,14
• Mangan / *Manganese* (Mn)		0,34
• Silic / *Silicon* (Si)		0,01
• Photpho / *Phosphorus* (P)		0,017
• Lưu huỳnh / *Sulfur* (S)		0,006
• Crôm / *Chromium* (Cr)		0,02
• Niken / *Nickel* (Ni)		0,01

Ghi chú/ *Notice* : Chiều dài tính toán ban đầu lo/ *Original gage length* : 50 mm

TRUNG TÂM KỸ THUẬT TIÊU CHUẨN ĐO LƯỜNG CHẤT LƯỢNG 3 — QUALITY ASSURANCE & TESTING CENTER 3

TEST REPORT OF SPP/SGP ELBOW 100A STEEL PIPE FROM QUATEST 3

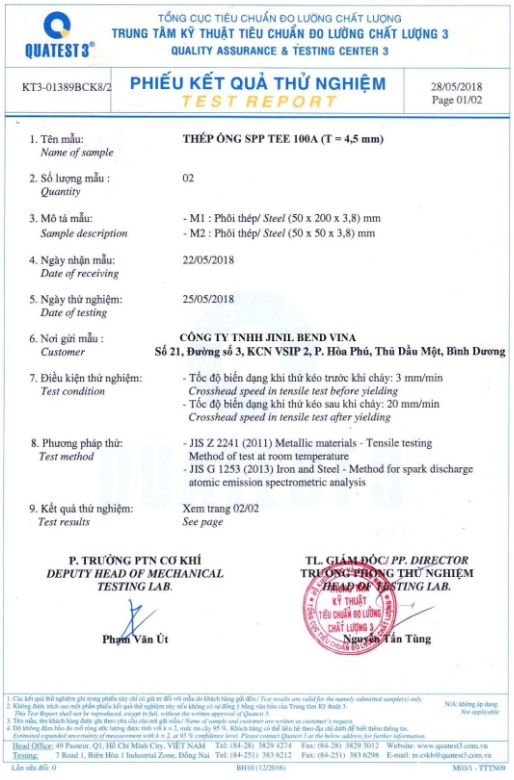

TỔNG CỤC TIÊU CHUẨN ĐO LƯỜNG CHẤT LƯỢNG
TRUNG TÂM KỸ THUẬT TIÊU CHUẨN ĐO LƯỜNG CHẤT LƯỢNG 3
QUALITY ASSURANCE & TESTING CENTER 3

KT3-01389BCK8/2 **PHIẾU KẾT QUẢ THỬ NGHIỆM** / *TEST REPORT* 28/05/2018 Page 01/02

1. Tên mẫu / *Name of sample*: **THÉP ỐNG SPP TEE 100A (T = 4,5 mm)**
2. Số lượng mẫu / *Quantity*: 02
3. Mô tả mẫu / *Sample description*: - M1 : Phôi thép/ *Steel* (50 x 200 x 3,8) mm; - M2 : Phôi thép/ *Steel* (50 x 50 x 3,8) mm
4. Ngày nhận mẫu / *Date of receiving*: 22/05/2018
5. Ngày thử nghiệm / *Date of testing*: 25/05/2018
6. Nơi gửi mẫu / *Customer*: **CÔNG TY TNHH JINIL BEND VINA** **Số 21, Đường số 3, KCN VSIP 2, P. Hòa Phú, Thủ Dầu Một, Bình Dương**
7. Điều kiện thử nghiệm / *Test condition*: - Tốc độ biến dạng khi thử kéo trước khi chảy: 3 mm/min *Crosshead speed in tensile test before yielding* - Tốc độ biến dạng khi thử kéo sau khi chảy: 20 mm/min *Crosshead speed in tensile test after yielding*
8. Phương pháp thử / *Test method*: - JIS Z 2241 (2011) Metallic materials - Tensile testing Method of test at room temperature - JIS G 1253 (2013) Iron and Steel - Method for spark discharge atomic emission spectrometric analysis
9. Kết quả thử nghiệm / *Test results*: Xem trang 02/02 / *See page*

P. TRƯỞNG PTN CƠ KHÍ / *DEPUTY HEAD OF MECHANICAL TESTING LAB.* — **Phạm Văn Út**

TL. GIÁM ĐỐC / *PP. DIRECTOR* **TRƯỞNG PHÒNG THỬ NGHIỆM** / *HEAD OF TESTING LAB.* — **Nguyễn Tấn Tùng**

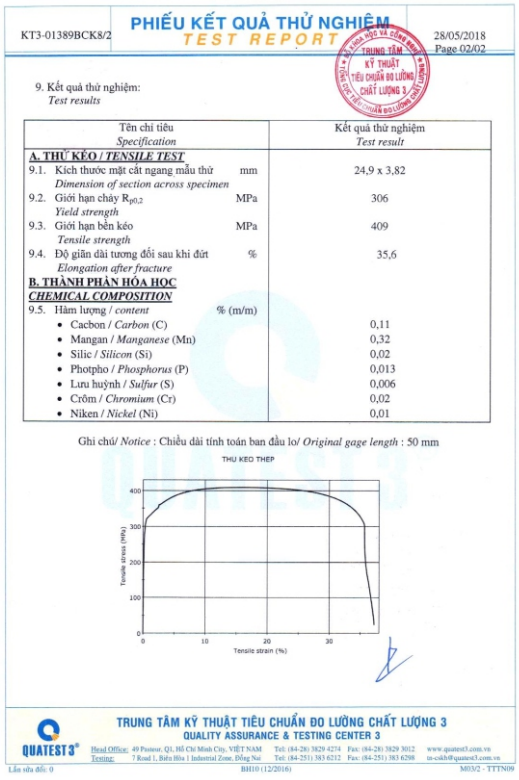

KT3-01389BCK8/2 **PHIẾU KẾT QUẢ THỬ NGHIỆM** / *TEST REPORT* 28/05/2018 Page 02/02

9. Kết quả thử nghiệm / *Test results*

Tên chỉ tiêu *Specification*		Kết quả thử nghiệm *Test result*
A. THỬ KÉO / *TENSILE TEST*		
9.1. Kích thước mặt cắt ngang mẫu thử *Dimension of section across specimen*	mm	24,9 x 3,82
9.2. Giới hạn chảy $R_{p0,2}$ *Yield strength*	MPa	306
9.3. Giới hạn bền kéo *Tensile strength*	MPa	409
9.4. Độ giãn dài tương đối sau khi đứt *Elongation after fracture*	%	35,6
B. THÀNH PHẦN HÓA HỌC ***CHEMICAL COMPOSITION***		
9.5. Hàm lượng / *content*	% (m/m)	
• Cacbon / *Carbon* (C)		0,11
• Mangan / *Manganese* (Mn)		0,32
• Silic / *Silicon* (Si)		0,02
• Photpho / *Phosphorus* (P)		0,013
• Lưu huỳnh / *Sulfur* (S)		0,006
• Crôm / *Chromium* (Cr)		0,02
• Niken / *Nickel* (Ni)		0,01

Ghi chú/ *Notice* : Chiều dài tính toán ban đầu lo/ *Original gage length* : 50 mm

TRUNG TÂM KỸ THUẬT TIÊU CHUẨN ĐO LƯỜNG CHẤT LƯỢNG 3 — QUALITY ASSURANCE & TESTING CENTER 3

TEST REPORT OF SPP/SGP TEE 100A STEEL PIPE FROM QUATEST 3

TỔNG CỤC TIÊU CHUẨN ĐO LƯỜNG CHẤT LƯỢNG
TRUNG TÂM KỸ THUẬT TIÊU CHUẨN ĐO LƯỜNG CHẤT LƯỢNG 3
QUALITY ASSURANCE & TESTING CENTER 3

KT3-01389BCK8/3 **PHIẾU KẾT QUẢ THỬ NGHIỆM** *TEST REPORT* 28/05/2018 Page 01/02

1. Tên mẫu: *Name of sample* — **THÉP ỐNG SPP REDUCER 100A (T = 4,5 mm)**
2. Số lượng mẫu : *Quantity* — 02
3. Mô tả mẫu: *Sample description* — - M1 : Phôi thép/ *Steel* (50 x 200 x 3,8) mm; - M2 : Phôi thép/ *Steel* (50 x 50 x 3,8) mm
4. Ngày nhận mẫu: *Date of receiving* — 22/05/2018
5. Ngày thử nghiệm: *Date of testing* — 25/05/2018
6. Nơi gửi mẫu : *Customer* — **CÔNG TY TNHH JINIL BEND VINA** **Số 21, Đường số 3, KCN VSIP 2, P. Hòa Phú, Thủ Dầu Một, Bình Dương**
7. Điều kiện thử nghiệm: *Test condition* — - Tốc độ biến dạng khi thử kéo trước khi chảy: 3 mm/min *Crosshead speed in tensile test before yielding* - Tốc độ biến dạng khi thử kéo sau khi chảy: 20 mm/min *Crosshead speed in tensile test after yielding*
8. Phương pháp thử: *Test method* — - JIS Z 2241 (2011) Metallic materials - Tensile testing Method of test at room temperature - JIS G 1253 (2013) Iron and Steel - Method for spark discharge atomic emission spectrometric analysis
9. Kết quả thử nghiệm: *Test results* — Xem trang 02/02 *See page*

P. TRƯỞNG PTN CƠ KHÍ *DEPUTY HEAD OF MECHANICAL TESTING LAB.* — **Phạm Văn Út**

TL. GIÁM ĐỐC/ *PP. DIRECTOR* **TRƯỞNG PHÒNG THỬ NGHIỆM** *HEAD OF TESTING LAB.* — **Nguyễn Tấn Tùng**

1. Các kết quả thử nghiệm ghi trong phiếu này chỉ có giá trị đối với mẫu do khách hàng gửi đến/ *Test results are valid for the namely submitted sample(s) only.*
2. Không được trích sao một phần phiếu kết quả thử nghiệm này nếu không có sự đồng ý bằng văn bản của Trung tâm Kỹ thuật 3. *This Test Report shall not be reproduced, except in full, without the written approval of Quatest 3.*
3. Tên mẫu, tên khách hàng được ghi theo yêu cầu của nơi gửi mẫu/ *Name of sample and customer are written as customer's request.*
4. Độ không đảm bảo đo mở rộng ước lượng được tính với k = 2, mức tin cậy 95 %. Khách hàng có thể liên hệ theo địa chỉ dưới để biết thêm thông tin. *Estimated expanded uncertainty of measurement with k = 2, at 95 % confidence level. Please contact Quatest 3 at the below address for further information.*

N/A: không áp dụng. *Not applicable*

Head Office: 49 Pasteur, Q1, Hồ Chí Minh City, VIỆT NAM Tel: (84-28) 3829 4274 Fax: (84-28) 3829 3012 Website: www.quatest3.com.vn
Testing: 7 Road 1, Biên Hòa 1 Industrial Zone, Đồng Nai Tel: (84-251) 383 6212 Fax: (84-251) 383 6298 E-mail: tn-cskh@quatest3.com.vn

Lần sửa đổi: 0 BH10 (12/2016) M03/1 - TTTN09

KT3-01389BCK8/3 **PHIẾU KẾT QUẢ THỬ NGHIỆM** *TEST REPORT* 28/05/2018 Page 02/02

9. Kết quả thử nghiệm: *Test results*

Tên chỉ tiêu *Specification*		Kết quả thử nghiệm *Test result*
A. THỬ KÉO / *TENSILE TEST*		
9.1. Kích thước mặt cắt ngang mẫu thử *Dimension of section across specimen*	mm	24,9 x 3,80
9.2. Giới hạn chảy $R_{p0,2}$ *Yield strength*	MPa	324
9.3. Giới hạn bền kéo *Tensile strength*	MPa	411
9.4. Độ giãn dài tương đối sau khi đứt *Elongation after fracture*	%	35,2
B. THÀNH PHẦN HÓA HỌC *CHEMICAL COMPOSITION*		
9.5. Hàm lượng / *content*	% (m/m)	
• Cacbon / *Carbon* (C)		0,10
• Mangan / *Manganese* (Mn)		0,32
• Silic / *Silicon* (Si)		0,02
• Photpho / *Phosphorus* (P)		0,011
• Lưu huỳnh / *Sulfur* (S)		0,006
• Crôm / *Chromium* (Cr)		0,02
• Niken / *Nickel* (Ni)		0,01

Ghi chú/ *Notice* : Chiều dài tính toán ban đầu lo/ *Original gage length* : 50 mm

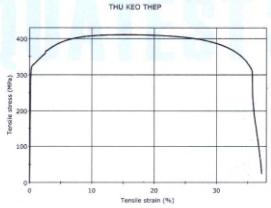

TRUNG TÂM KỸ THUẬT TIÊU CHUẨN ĐO LƯỜNG CHẤT LƯỢNG 3
QUALITY ASSURANCE & TESTING CENTER 3
Head Office: 49 Pasteur, Q1, Hồ Chí Minh City, VIỆT NAM Tel: (84-28) 3829 4274 Fax: (84-28) 3829 3012 www.quatest3.com.vn
Testing: 7 Road 1, Biên Hòa 1 Industrial Zone, Đồng Nai Tel: (84-251) 383 6212 Fax: (84-251) 383 6298 tn-cskh@quatest3.com.vn

Lần sửa đổi: 0 BH10 (12/2016) M03/2 - TTTN09

TEST REPORT OF SPP/SGP REDUCCER 100A STEEL PIPE FROM QUATEST 3

TỔNG CỤC TIÊU CHUẨN ĐO LƯỜNG CHẤT LƯỢNG
TRUNG TÂM KỸ THUẬT TIÊU CHUẨN ĐO LƯỜNG CHẤT LƯỢNG 3
QUALITY ASSURANCE & TESTING CENTER 3

KT3-01389BCK8/4 **PHIẾU KẾT QUẢ THỬ NGHIỆM** *TEST REPORT* 28/05/2018 Page 01/02

1. Tên mẫu: *Name of sample* — **THÉP TẤM SPP CAP 100A (T = 4,5 mm)**
2. Số lượng mẫu : *Quantity* — 02
3. Mô tả mẫu: *Sample description* — - M1 : Phôi thép/ *Steel* (50 x 200 x 3,9) mm; - M2 : Phôi thép/ *Steel* (50 x 50 x 3,9) mm
4. Ngày nhận mẫu: *Date of receiving* — 22/05/2018
5. Ngày thử nghiệm: *Date of testing* — 25/05/2018
6. Nơi gửi mẫu : *Customer* — **CÔNG TY TNHH JINIL BEND VINA** **Số 21, Đường số 3, KCN VSIP 2, P. Hòa Phú, Thủ Dầu Một, Bình Dương**
7. Điều kiện thử nghiệm: *Test condition* — - Tốc độ biến dạng khi thử kéo trước khi chảy: 3 mm/min *Crosshead speed in tensile test before yielding* - Tốc độ biến dạng khi thử kéo sau khi chảy: 20 mm/min *Crosshead speed in tensile test after yielding*
8. Phương pháp thử: *Test method* — - JIS Z 2241 (2011) Metallic materials - Tensile testing Method of test at room temperature - JIS G 1253 (2013) Iron and Steel - Method for spark discharge atomic emission spectrometric analysis
9. Kết quả thử nghiệm: *Test results* — Xem trang 02/02 *See page*

P. TRƯỞNG PTN CƠ KHÍ *DEPUTY HEAD OF MECHANICAL TESTING LAB.* — **Phạm Văn Út**

TL. GIÁM ĐỐC/ *PP. DIRECTOR* **TRƯỞNG PHÒNG THỬ NGHIỆM** *HEAD OF TESTING LAB.* — **Nguyễn Tấn Tùng**

1. Các kết quả thử nghiệm ghi trong phiếu này chỉ có giá trị đối với mẫu do khách hàng gửi đến/ *Test results are valid for the namely submitted sample(s) only.*
2. Không được trích sao một phần phiếu kết quả thử nghiệm này nếu không có sự đồng ý bằng văn bản của Trung tâm Kỹ thuật 3. *This Test Report shall not be reproduced, except in full, without the written approval of Quatest 3.*
3. Tên mẫu, tên khách hàng được ghi theo yêu cầu của nơi gửi mẫu/ *Name of sample and customer are written as customer's request.*
4. Độ không đảm bảo đo mở rộng ước lượng được tính với k = 2, mức tin cậy 95 %. Khách hàng có thể liên hệ theo địa chỉ dưới để biết thêm thông tin. *Estimated expanded uncertainty of measurement with k = 2, at 95 % confidence level. Please contact Quatest 3 at the below address for further information.*

N/A: không áp dụng. *Not applicable*

Head Office: 49 Pasteur, Q1, Hồ Chí Minh City, VIỆT NAM Tel: (84-28) 3829 4274 Fax: (84-28) 3829 3012 Website: www.quatest3.com.vn
Testing: 7 Road 1, Biên Hòa 1 Industrial Zone, Đồng Nai Tel: (84-251) 383 6212 Fax: (84-251) 383 6298 E-mail: tn-cskh@quatest3.com.vn

Lần sửa đổi: 0 BH10 (12/2016) M03/1 - TTTN09

KT3-01389BCK8/4 **PHIẾU KẾT QUẢ THỬ NGHIỆM** *TEST REPORT* 28/05/2018 Page 02/02

9. Kết quả thử nghiệm: *Test results*

Tên chỉ tiêu *Specification*		Kết quả thử nghiệm *Test result*
A. THỬ KÉO / *TENSILE TEST*		
9.1. Kích thước mặt cắt ngang mẫu thử *Dimension of section across specimen*	mm	25,2 x 3,90
9.2. Giới hạn chảy $R_{p0,2}$ *Yield strength*	MPa	280
9.3. Giới hạn bền kéo *Tensile strength*	MPa	410
9.4. Độ giãn dài tương đối sau khi đứt *Elongation after fracture*	%	37,0
B. THÀNH PHẦN HÓA HỌC *CHEMICAL COMPOSITION*		
9.5. Hàm lượng / *content*	% (m/m)	
• Cacbon / *Carbon* (C)		0,14
• Mangan / *Manganese* (Mn)		0,61
• Silic / *Silicon* (Si)		0,09
• Photpho / *Phosphorus* (P)		0,005
• Lưu huỳnh / *Sulfur* (S)		0,006
• Crôm / *Chromium* (Cr)		0,06
• Niken / *Nickel* (Ni)		0,11

Ghi chú/ *Notice* : Chiều dài tính toán ban đầu lo/ *Original gage length* : 50 mm

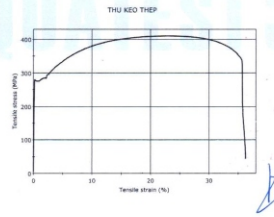

TRUNG TÂM KỸ THUẬT TIÊU CHUẨN ĐO LƯỜNG CHẤT LƯỢNG 3
QUALITY ASSURANCE & TESTING CENTER 3
Head Office: 49 Pasteur, Q1, Hồ Chí Minh City, VIỆT NAM Tel: (84-28) 3829 4274 Fax: (84-28) 3829 3012 www.quatest3.com.vn
Testing: 7 Road 1, Biên Hòa 1 Industrial Zone, Đồng Nai Tel: (84-251) 383 6212 Fax: (84-251) 383 6298 tn-cskh@quatest3.com.vn

Lần sửa đổi: 0 BH10 (12/2016) M03/2 - TTTN09

TEST REPORT OF SPP/SGP CAP 100A STEEL PLATE FROM QUATEST 3

MILL TEST DOCUMENTS

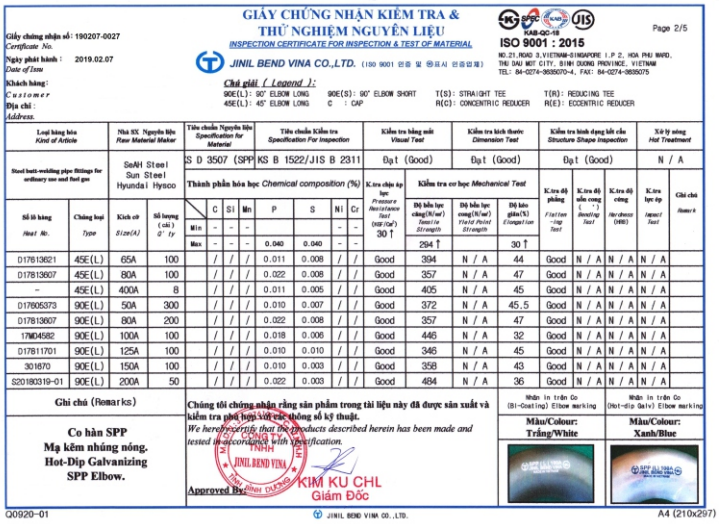

GIẤY CHỨNG NHẬN KIỂM TRA & THỬ NGHIỆM NGUYÊN LIỆU
INSPECTION CERTIFICATE FOR INSPECTION & TEST OF MATERIAL
JINIL BEND VINA CO.,LTD. (ISO 9001 인증 및 ㈜표시 인증업체)
ISO 9001 : 2015
Page 2/5

Giấy chứng nhận số: 190207-0027
Certificate No.
Ngày phát hành: 2019.02.07
Date of Issu
Khách hàng:
Customer
Địa chỉ:
Address.

Chú giải (Legend):
90E(L): 90° ELBOW LONG 90E(S): 90° ELBOW SHORT T(S): STRAIGHT TEE T(R): REDUCING TEE
45E(L): 45° ELBOW LONG C : CAP R(C): CONCENTRIC REDUCER R(E): ECCENTRIC REDUCER

Loại hàng hóa Kind of Article		Nhà SX Nguyên liệu Raw Material Maker		Tiêu chuẩn Nguyên liệu Specification for Material	Tiêu chuẩn Kiểm tra Specification For Inspection	Kiểm tra bằng mắt Visual Test	Kiểm tra kích thước Dimension Test	Kiểm tra hình dạng kết cấu Structure Shape Inspection			Xử lý nóng Hot Treatment	
Steel butt-welding pipe fittings for ordinary use and fuel gas		SeAH Steel Sun Steel Hyundai Hysco		S D 3507 (SPP)	KS B 1522/JIS B 2311	Đạt (Good)	Đạt (Good)	Đạt (Good)			N / A	
Số tô hàng Heat No.	Chủng loại Type	Kích cỡ Size(A)	Số lượng (cái) Q'ty	Thành phần hóa học Chemical composition (%)		K.tra chịu áp lực Pressure Resistance Test (MPa/Cm²) 30 ↑	Kiểm tra cơ học Mechanical Test: Độ bền lực căng(N/m²) Tensile Strength; Độ bền lực uốn(N/m²) Yield Point Strength; Độ bền giãn(%) Elongation	K.tra độ phẳng Flattening Test	K.tra độ uốn cong (°) Bending Test	K.tra độ cứng Hardness (HRB)	K.tra lực ép Impact Test	Ghi chú Remark
				C Si Mn P S Ni Cr								
				Min - - -								
				Max - - - 0.040 0.040 - -			294 ↑ 30 ↑					
D17813621	45E(L)	65A	100	/ / / 0.011 0.008 / /		Good	394	N / A	44	Good	N / A	N / A	N / A	N / A
D17813607	45E(L)	80A	100	/ / / 0.022 0.008 / /		Good	357	N / A	47	Good	N / A	N / A	N / A	N / A
--	45E(L)	400A	8	/ / / 0.011 0.005 / /		Good	405	N / A	45	Good	N / A	N / A	N / A	N / A
D17605373	90E(L)	50A	300	/ / / 0.010 0.007 / /		Good	372	N / A	45.5	Good	N / A	N / A	N / A	N / A
D17813607	90E(L)	80A	200	/ / / 0.022 0.008 / /		Good	357	N / A	47	Good	N / A	N / A	N / A	N / A
17MD4582	90E(L)	100A	100	/ / / 0.018 0.006 / /		Good	446	N / A	32	Good	N / A	N / A	N / A	N / A
D17811701	90E(L)	125A	100	/ / / 0.010 0.010 / /		Good	346	N / A	45	Good	N / A	N / A	N / A	N / A
301870	90E(L)	150A	100	/ / / 0.010 0.003 / /		Good	358	N / A	43	Good	N / A	N / A	N / A	N / A
S20180319-01	90E(L)	200A	50	/ / / 0.022 0.003 / /		Good	484	N / A	36	Good	N / A	N / A	N / A	N / A

Ghi chú (Remarks)

Co hàn SPP
Mạ kẽm nhúng nóng.
Hot-Dip Galvanizing
SPP Elbow.

Chúng tôi chứng nhận rằng sản phẩm trong tài liệu này đã được sản xuất và kiểm tra phù hợp với các thông số kỹ thuật.
We hereby certify that the products described herein has been made and tested in accordance with specification.

Approved By: KIM KU CHL Giám Đốc

Nhãn in trên Co (Bi-Coating) Elbow marking — Màu/Colour: Trắng/White
Nhãn in trên Co (Hot-dip Galv) Elbow marking — Màu/Colour: Xanh/Blue

Q0920-01 JINIL BEND VINA CO.,LTD. A4 (210x297)

SPP/SGP 90D-45D ELBOW

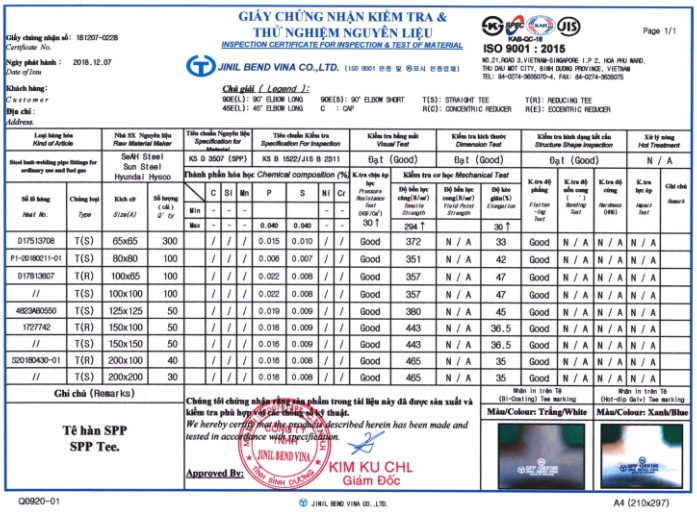

GIẤY CHỨNG NHẬN KIỂM TRA & THỬ NGHIỆM NGUYÊN LIỆU
INSPECTION CERTIFICATE FOR INSPECTION & TEST OF MATERIAL
JINIL BEND VINA CO.,LTD. (ISO 9001 인증 및 ㈜표시 인증업체)
ISO 9001 : 2015
Page 1/1

Giấy chứng nhận số: 181207-0228
Certificate No.
Ngày phát hành: 2018.12.07
Date of Issu
Khách hàng:
Customer
Địa chỉ:
Address.

Chú giải (Legend):
90E(L): 90° ELBOW LONG 90E(S): 90° ELBOW SHORT T(S): STRAIGHT TEE T(R): REDUCING TEE
45E(L): 45° ELBOW LONG C : CAP R(C): CONCENTRIC REDUCER R(E): ECCENTRIC REDUCER

Loại hàng hóa Kind of Article		Nhà SX Nguyên liệu Raw Material Maker		Tiêu chuẩn Nguyên liệu Specification for Material	Tiêu chuẩn Kiểm tra Specification For Inspection	Kiểm tra bằng mắt Visual Test	Kiểm tra kích thước Dimension Test	Kiểm tra hình dạng kết cấu Structure Shape Inspection			Xử lý nóng Hot Treatment	
Steel butt-welding pipe fittings for ordinary use and fuel gas		SeAH Steel Sun Steel Hyundai Hysco		KS D 3507 (SPP)	KS B 1522/JIS B 2311	Đạt (Good)	Đạt (Good)	Đạt (Good)			N / A	
Số tô hàng Heat No.	Chủng loại Type	Kích cỡ Size(A)	Số lượng (cái) Q'ty	Thành phần hóa học Chemical composition (%)		K.tra chịu áp lực Pressure Resistance Test (MPa/Cm²) 30 ↑	Kiểm tra cơ học Mechanical Test: Độ bền lực căng(N/m²) Tensile Strength; Độ bền lực uốn(N/m²) Yield Point Strength; Độ bền giãn(%) Elongation	K.tra độ phẳng Flattening Test	K.tra độ uốn cong (°) Bending Test	K.tra độ cứng Hardness (HRB)	K.tra lực ép Impact Test	Ghi chú Remark
				C Si Mn P S Ni Cr								
				Min - - -								
				Max - - - 0.040 0.040 - -			294 ↑ 30 ↑					
D17513708	T(S)	65x65	300	/ / / 0.015 0.010 / /		Good	372	N / A	33	Good	N / A	N / A	N / A	N / A
P1-20180211-01	T(S)	80x80	100	/ / / 0.006 0.007 / /		Good	351	N / A	42	Good	N / A	N / A	N / A	N / A
D17813607	T(R)	100x65	100	/ / / 0.022 0.008 / /		Good	357	N / A	47	Good	N / A	N / A	N / A	N / A
//	T(S)	100x100	100	/ / / 0.022 0.008 / /		Good	357	N / A	47	Good	N / A	N / A	N / A	N / A
4823460550	T(S)	125x125	50	/ / / 0.019 0.009 / /		Good	380	N / A	45	Good	N / A	N / A	N / A	N / A
1727742	T(R)	150x100	50	/ / / 0.016 0.009 / /		Good	443	N / A	36.5	Good	N / A	N / A	N / A	N / A
//	T(S)	150x150	50	/ / / 0.016 0.009 / /		Good	443	N / A	36.5	Good	N / A	N / A	N / A	N / A
S20180430-01	T(R)	200x100	40	/ / / 0.016 0.008 / /		Good	465	N / A	35	Good	N / A	N / A	N / A	N / A
//	T(S)	200x200	30	/ / / 0.016 0.008 / /		Good	465	N / A	35	Good	N / A	N / A	N / A	N / A

Ghi chú (Remarks)

Tê hàn SPP
SPP Tee.

Chúng tôi chứng nhận rằng sản phẩm trong tài liệu này đã được sản xuất và kiểm tra phù hợp với các thông số kỹ thuật.
We hereby certify that the products described herein has been made and tested in accordance with specification.

Approved By: KIM KU CHL Giám Đốc

Nhãn in trên Tê (Bi-Coating) Tee marking — Màu/Colour: Trắng/White
Nhãn in trên Tê (Hot-dip Galv) Tee marking — Màu/Colour: Xanh/Blue

Q0920-01 JINIL BEND VINA CO.,LTD. A4 (210x297)

SPP/SGP TEE

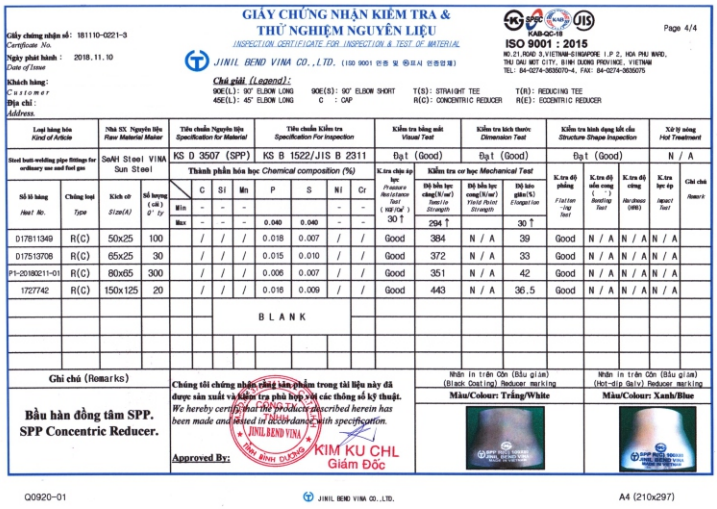

GIẤY CHỨNG NHẬN KIỂM TRA & THỬ NGHIỆM NGUYÊN LIỆU
INSPECTION CERTIFICATE FOR INSPECTION & TEST OF MATERIAL
JINIL BEND VINA CO.,LTD. (ISO 9001 인증 및 ㈜표시 인증업체)
ISO 9001 : 2015
Page 4/4

Giấy chứng nhận số: 181110-0221-3
Certificate No.
Ngày phát hành: 2018.11.10
Date of Issue
Khách hàng:
Customer
Địa chỉ:
Address.

Chú giải (Legend):
90E(L): 90° ELBOW LONG 90E(S): 90° ELBOW SHORT T(S): STRAIGHT TEE T(R): REDUCING TEE
45E(L): 45° ELBOW LONG C : CAP R(C): CONCENTRIC REDUCER R(E): ECCENTRIC REDUCER

Loại hàng hóa Kind of Article		Nhà SX Nguyên liệu Raw Material Maker		Tiêu chuẩn Nguyên liệu Specification for Material	Tiêu chuẩn Kiểm tra Specification For Inspection	Kiểm tra bằng mắt Visual Test	Kiểm tra kích thước Dimension Test	Kiểm tra hình dạng kết cấu Structure Shape Inspection			Xử lý nóng Hot Treatment	
Steel butt-welding pipe fittings for ordinary use and fuel gas		SeAH Steel VINA Sun Steel		KS D 3507 (SPP)	KS B 1522/JIS B 2311	Đạt (Good)	Đạt (Good)	Đạt (Good)			N / A	
Số tô hàng Heat No.	Chủng loại Type	Kích cỡ Size(A)	Số lượng (cái) Q'ty	Thành phần hóa học Chemical composition (%)		K.tra chịu áp lực Pressure Resistance Test (MPa/Cm²) 30 ↑	Kiểm tra cơ học Mechanical Test: Độ bền lực căng(N/m²) Tensile Strength; Độ bền lực uốn(N/m²) Yield Point Strength; Độ bền giãn(%) Elongation	K.tra độ phẳng Flattening Test	K.tra độ uốn cong (°) Bending Test	K.tra độ cứng Hardness (HRB)	K.tra lực ép Impact Test	Ghi chú Remark
				C Si Mn P S Ni Cr								
				Min - - -								
				Max - - - 0.040 0.040 - -			294 ↑ 30 ↑					
D17811349	R(C)	50x25	100	/ / / 0.018 0.007 / /		Good	384	N / A	39	Good	N / A	N / A	N / A	N / A
D17513708	R(C)	65x25	30	/ / / 0.015 0.010 / /		Good	372	N / A	33	Good	N / A	N / A	N / A	N / A
P1-20180211-01	R(C)	80x65	300	/ / / 0.006 0.007 / /		Good	351	N / A	42	Good	N / A	N / A	N / A	N / A
1727742	R(C)	150x125	20	/ / / 0.016 0.009 / /		Good	443	N / A	36.5	Good	N / A	N / A	N / A	N / A
				B L A N K								

Ghi chú (Remarks)

Bầu hàn đồng tâm SPP.
SPP Concentric Reducer.

Chúng tôi chứng nhận rằng sản phẩm trong tài liệu này đã được sản xuất và kiểm tra phù hợp với các thông số kỹ thuật.
We hereby certify that the products described herein has been made and tested in accordance with specification.

Approved By: KIM KU CHL Giám Đốc

Nhãn in trên Côn (Bầu giảm) (Bi-Coating) Reducer marking — Màu/Colour: Trắng/White
Nhãn in trên Côn (Bầu giảm) (Hot-dip Galv) Reducer marking — Màu/Colour: Xanh/Blue

Q0920-01 JINIL BEND VINA CO.,LTD. A4 (210x297)

SPP/SGP REDUCER

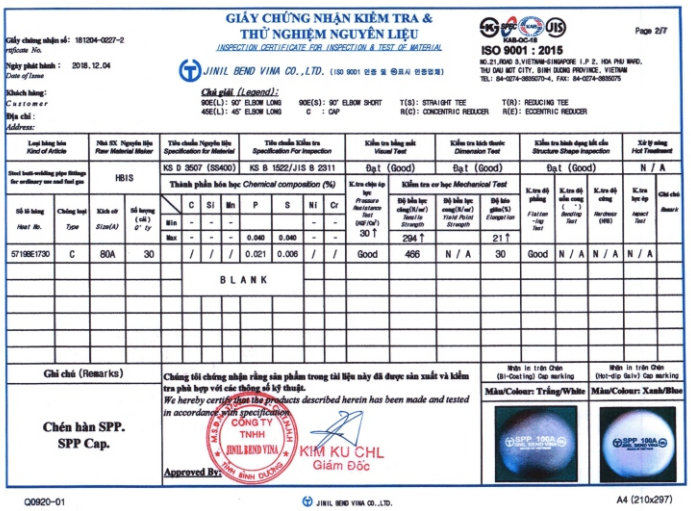

GIẤY CHỨNG NHẬN KIỂM TRA & THỬ NGHIỆM NGUYÊN LIỆU
INSPECTION CERTIFICATE FOR INSPECTION & TEST OF MATERIAL
JINIL BEND VINA CO.,LTD. (ISO 9001 인증 및 ㈜표시 인증업체)
ISO 9001 : 2015
Page 2/7

Giấy chứng nhận số: 181204-0227-2
Certificate No.
Ngày phát hành: 2018.12.04
Date of Issue
Khách hàng:
Customer
Địa chỉ:
Address:

Chú giải (Legend):
90E(L): 90° ELBOW LONG 90E(S): 90° ELBOW SHORT T(S): STRAIGHT TEE T(R): REDUCING TEE
45E(L): 45° ELBOW LONG C : CAP R(C): CONCENTRIC REDUCER R(E): ECCENTRIC REDUCER

Loại hàng hóa Kind of Article		Nhà SX Nguyên liệu Raw Material Maker		Tiêu chuẩn Nguyên liệu Specification for Material	Tiêu chuẩn Kiểm tra Specification For Inspection	Kiểm tra bằng mắt Visual Test	Kiểm tra kích thước Dimension Test	Kiểm tra hình dạng kết cấu Structure Shape Inspection			Xử lý nóng Hot Treatment	
Steel butt-welding pipe fittings for ordinary use and fuel gas		HBIS		KS D 3507 (SS400)	KS B 1522/JIS B 2311	Đạt (Good)	Đạt (Good)	Đạt (Good)			N / A	
Số tô hàng Heat No.	Chủng loại Type	Kích cỡ Size(A)	Số lượng (cái) Q'ty	Thành phần hóa học Chemical composition (%)		K.tra chịu áp lực Pressure Resistance Test (MPa/Cm²) 30 ↑	Kiểm tra cơ học Mechanical Test: Độ bền lực căng(N/m²) Tensile Strength; Độ bền lực uốn(N/m²) Yield Point Strength; Độ bền giãn(%) Elongation	K.tra độ phẳng Flattening Test	K.tra độ uốn cong (°) Bending Test	K.tra độ cứng Hardness (HRB)	K.tra lực ép Impact Test	Ghi chú Remark
				C Si Mn P S Ni Cr								
				Min - - -								
				Max - - - 0.040 0.040 - -			294 ↑ 21 ↑					
57198E1730	C	80A	30	/ / / 0.021 0.006 / /		Good	466	N / A	30	Good	N / A	N / A	N / A
				B L A N K								

Ghi chú (Remarks)

Chén hàn SPP.
SPP Cap.

Chúng tôi chứng nhận rằng sản phẩm trong tài liệu này đã được sản xuất và kiểm tra phù hợp với các thông số kỹ thuật.
We hereby certify that the products described herein has been made and tested in accordance with specification.

Approved By: KIM KU CHL Giám Đốc

Nhãn in trên Chén (Bi-Coating) Cap marking — Màu/Colour: Trắng/White
Nhãn in trên Chén (Hot-dip Galv) Cap marking — Màu/Colour: Xanh/Blue

Q0920-01 JINIL BEND VINA CO.,LTD. A4 (210x297)

SPP/SGP CAP

STEEL BUTT-WELDING FITTINGS

CONTENTS

KS/JIS

STEEL BUTT-WELDING PIPE FITTINGS

90° Elbow(Long, Short)
45° Elbow(Long)

SPP/SGP, 7.9T, STD, X-S

KS B 1543, JIS B 2311/2312/2313

Unit : mm

Nominal Pipe Size	Outside Diameter OD	Inside Diameter ID	Wall Thickness T	Long		Short
				90°	45°	90°
				A	B	A
15	21.7	16.1	2.8	38.1	15.8	-
20	27.2	21.6	2.8	38.1	15.8	-
25	34.0	27.6	3.2	38.1	15.8	25.4
32	42.7	35.7	3.5	47.6	19.7	31.8
40	48.6	41.6	3.5	57.2	23.7	38.1
50	60.5	52.9	3.8	76.2	31.6	50.8
65	76.3	67.9	4.2	95.3	39.5	63.5
80	89.1	80.7	4.2	114.3	47.3	76.2
90	101.6	93.2	4.2	133.4	55.3	88.9
100	114.3	105.3	4.5	152.4	63.1	101.6
125	139.8	130.8	4.5	190.5	78.9	127.0
150	165.2	155.2	5.0	228.6	94.7	152.4
200	216.3	204.7	5.8	304.8	126.3	203.2
250	267.4	254.2	6.6	381.0	157.8	254.0
300	318.5	304.7	6.9	457.2	189.4	304.8
350	355.6	339.8	7.9	533.4	220.9	355.6
400	406.4	390.6	7.9	609.6	252.5	406.4
450	457.2	441.4	7.9	685.8	284.1	457.2
500	508.0	492.2	7.9	762.0	315.6	508.0

KS B 1543, JIS B 2311/2312/2313

Unit : mm

Nominal Pipe Size	Outside Diameter OD	7.9T		STD		X-S		Center to End		
								Long		Short
		ID	T	ID	T	ID	T	A (90°)	B (45°)	A (90°)
350	355.6	339.8	7.9	336.6	9.5	330.2	12.7	533.4	220.9	355.6
400	406.4	390.6	7.9	387.4	9.5	381.0	12.7	609.6	252.5	406.4
450	457.2	441.4	7.9	438.2	9.5	431.8	12.7	685.8	284.1	457.2
500	508.0	492.2	7.9	489.0	9.5	482.6	12.7	762.0	315.6	508.0
550	558.8	543.0	7.9	539.8	9.5	533.4	12.7	838.2	347.2	558.8
600	609.6	593.8	7.9	590.6	9.5	584.2	12.7	914.4	378.7	609.6
650	660.4	644.6	7.9	641.4	9.5	635.0	12.7	990.6	410.3	660.4
700	711.2	695.4	7.9	692.2	9.5	685.8	12.7	1066.8	441.9	711.2
750	762.0	746.2	7.9	743.0	9.5	736.6	12.7	1143.0	473.4	762.0
800	812.8	797.0	7.9	793.8	9.5	787.4	12.7	1219.2	505.0	812.8
850	863.6	847.8	7.9	844.6	9.5	838.2	12.7	1295.4	536.6	863.6
900	914.4	898.6	7.9	895.4	9.5	889.0	12.7	1371.6	568.1	914.4
950	965.2	949.4	7.9	946.2	9.5	939.8	12.7	1447.8	599.7	965.2
1000	1016.0	1000.2	7.9	997.0	9.5	990.6	12.7	1524.0	631.2	1016.0

Sch40, Sch80, Sch120, Sch160

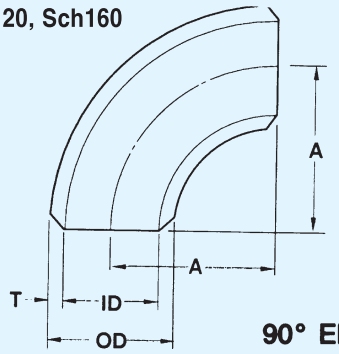

90° Elbow

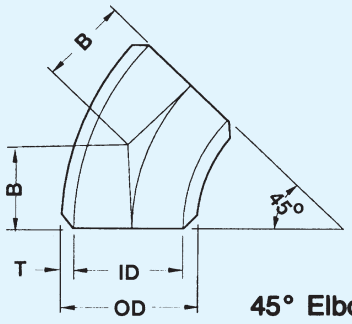

45° Elbow

KS B 1543, JIS B 2311/2312/2313

Unit : mm

Nominal Pipe Size	Outside Diameter OD	Sch 40		Sch 80		Sch 120		Sch 160		Center to End		
										Long		Short
		ID	T	ID	T	ID	T	ID	T	A (90°)	B (45°)	A (90°)
15	21.7	16.1	2.8	14.3	3.7	-	-	-	-	38.1	15.8	-
20	27.2	21.4	2.9	19.4	3.9	-	-	-	-	38.1	15.8	-
25	34.0	27.2	3.4	25.0	4.5	-	-	-	-	38.1	15.8	25.4
32	42.7	35.5	3.6	32.9	4.9	-	-	-	-	47.6	19.7	31.8
40	48.6	41.2	3.7	38.4	5.1	-	-	34.4	7.1	57.2	23.7	38.1
50	60.5	52.7	3.9	49.5	5.5	-	-	43.1	8.7	76.2	31.6	50.8
65	76.3	65.9	5.2	62.3	7.0	-	-	57.3	9.5	95.3	39.5	63.5
80	89.1	78.1	5.5	73.9	7.6	-	-	66.9	11.1	114.3	47.3	76.2
90	101.6	90.2	5.7	85.4	8.1	-	-	76.2	12.7	133.4	55.3	88.9
100	114.3	102.3	6.0	97.1	8.6	92.1	11.1	87.3	13.5	152.4	63.1	101.6
125	139.8	126.6	6.6	120.8	9.5	114.4	12.7	108.0	15.9	190.5	78.9	127.0
150	165.2	151.0	7.1	143.2	11.0	136.6	14.3	128.8	18.2	228.6	94.7	152.4
200	216.3	199.9	8.2	190.9	12.7	179.9	18.2	170.3	23.0	304.8	126.3	203.2
250	267.4	248.8	9.3	237.2	15.1	224.6	21.4	210.2	28.6	381.0	157.8	254.0
300	318.5	297.9	10.3	283.7	17.4	267.7	25.4	251.9	33.3	457.2	189.4	304.8
350	355.6	333.4	11.1	317.6	19.0	300.0	27.8	284.2	35.7	533.4	220.9	355.6
400	406.4	381.0	12.7	363.6	21.4	344.6	30.9	325.4	40.5	609.6	252.5	406.4
450	457.2	428.6	14.3	409.6	23.8	387.4	34.9	366.8	45.2	685.8	284.1	457.2
500	508.0	477.8	15.1	455.6	26.2	431.8	38.1	408.0	50.0	762.0	315.6	508.0
550	558.8	528.6	*15.1	501.6	28.6	-	-	-	-	838.2	347.2	558.8
600	609.6	574.8	17.4	547.6	31.0	-	-	-	-	914.4	378.7	609.6
650	660.4	625.6	*17.4	-	-	-	-	-	-	990.6	410.3	660.4
700	711.2	676.4	*17.4	-	-	-	-	-	-	1066.8	441.9	711.2
750	762.0	727.2	*17.4	-	-	-	-	-	-	1143.0	473.4	762.0
800	812.8	778.0	17.4	-	-	-	-	-	-	1219.2	505.0	812.8
850	863.6	828.8	17.4	-	-	-	-	-	-	1295.4	536.6	863.6
900	914.4	876.4	19.0	-	-	-	-	-	-	1371.6	568.1	914.4

※ Asterisks(∗) denote JINIL BEND VINA Standard.

STEEL BUTT-WELDING PIPE FITTINGS

180° Elbow(Long, Short) CAP

SPP/SGP

KS B 1543, JIS B 2311/2312/2313

Unit : mm

Nominal Pipe Size	Outside Diameter OD	Inside Diameter ID	Wall Thickness T	Cap	180° Elbow			
				E	Long		Short	
					P	K	P	K
15	21.7	16.1	2.8	-	76.2	49.0	-	-
20	27.2	21.6	2.8	-	76.2	51.7	-	-
25	34.0	27.6	3.2	38.1	76.2	55.1	50.8	42.4
32	42.7	35.7	3.5	38.1	95.2	69.0	63.6	53.2
40	48.6	41.6	3.5	38.1	114.4	81.5	76.2	62.4
50	60.5	52.9	3.8	38.1	152.4	106.5	101.6	81.1
65	76.3	67.9	4.2	38.1	190.6	133.5	127.0	101.7
80	89.1	80.7	4.2	50.8	228.6	158.9	152.4	120.8
90	101.6	93.2	4.2	63.5	266.8	184.2	177.8	139.7
100	114.3	105.3	4.5	63.5	304.8	209.6	203.2	158.8
125	139.8	130.8	4.5	76.2	381.0	260.4	254.0	196.9
150	165.2	155.2	5.0	88.9	457.2	311.2	304.8	235.0
200	216.3	204.7	5.8	101.6	609.6	413.0	406.4	311.4
250	267.4	254.2	6.6	127.0	762.0	514.7	508.0	387.7
300	318.5	304.7	6.9	152.4	914.4	616.5	609.6	464.1
350	355.6	339.8	7.9	165.1	1066.8	711.2	711.2	533.4
400	406.4	390.6	7.9	177.8	1219.2	812.8	812.8	609.6
450	457.2	441.4	7.9	203.2	-	-	-	-
500	508.0	492.2	7.9	228.6	-	-	-	-

Sch40, Sch80, Sch120, Sch160

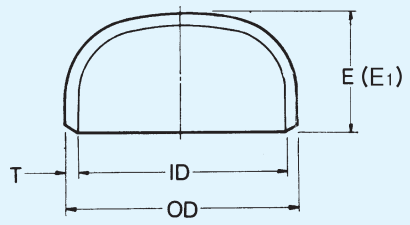

Cap

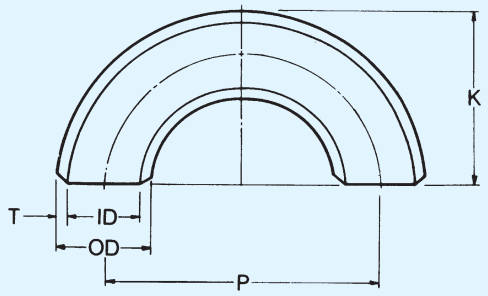

180° Elbow

KS B 1543, JIS B 2311/2312/2313

Unit : mm

Nominal Pipe Size	Outside Diameter OD	Wall Thickness T				Cap			180° Elbow			
						E	E_1	Limited Wall Thickness for E	Long		Short	
		Sch 40	Sch 80	Sch 120	Sch 160				P	K	P	K
15	21.7	2.8	3.7	-	-	25.4	-	-	76.2	49.0	-	-
20	27.2	2.9	3.9	-	-	25.4	-	-	76.2	51.7	-	-
25	34.0	3.4	4.5	-	-	38.1	-	-	76.2	55.1	50.8	42.4
32	42.7	3.6	4.9	-	-	38.1	-	-	95.2	69.0	63.6	53.2
40	48.6	3.7	5.1	-	7.1	38.1	-	-	114.4	81.5	76.2	62.4
50	60.5	3.9	5.5	-	8.7	38.1	44.5	5.5	152.4	106.5	101.6	81.1
65	76.3	5.2	7.0	-	9.5	38.1	50.8	7.0	190.6	133.5	127.0	101.7
80	89.1	5.5	7.6	-	11.1	50.8	63.5	7.6	228.6	158.9	152.4	120.8
90	101.6	5.7	8.1	-	12.7	63.5	76.2	8.1	266.8	184.2	177.8	139.7
100	114.3	6.0	8.6	11.1	13.5	63.5	76.2	8.6	304.8	209.6	203.2	158.8
125	139.8	6.6	9.5	12.7	15.9	76.2	88.9	9.5	381.0	260.4	254.0	196.9
150	165.2	7.1	11.0	14.3	18.2	88.9	101.6	11.0	457.2	311.2	304.8	235.0
200	216.3	8.2	12.7	18.2	23.0	101.6	127.0	12.7	609.6	413.0	406.4	311.4
250	267.4	9.3	15.1	21.4	28.6	127.0	152.4	12.7	762.0	514.7	508.0	387.7
300	318.5	10.3	17.4	25.4	33.3	152.4	177.8	12.7	914.4	616.5	609.6	464.1
350	355.6	11.1	19.0	27.8	35.7	165.1	190.5	12.7	1066.8	711.2	711.2	533.4
400	406.4	12.7	21.4	30.9	40.5	177.8	203.2	12.7	1219.2	812.8	812.8	609.6
450	457.2	14.3	23.8	34.9	45.2	203.2	228.6	12.7	1371.6	914.4	914.4	685.8
500	508.0	15.1	26.2	38.1	50.0	228.6	254.0	12.7	1524.0	1016.0	1016.0	762.0

STEEL BUTT-WELDING PIPE FITTINGS

Tee

SPP/SGP

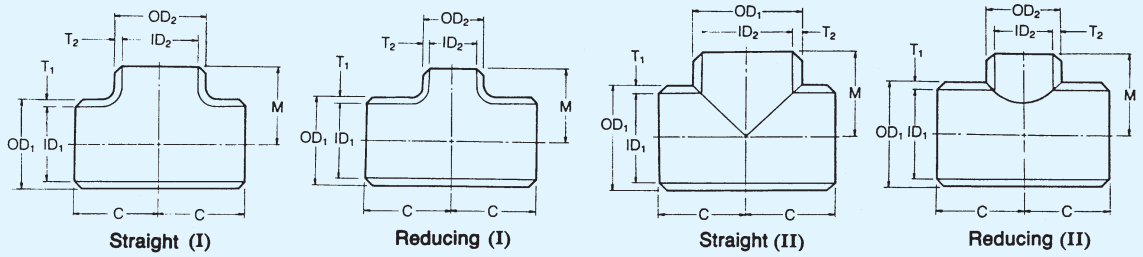

KS B 1543, JIS B 2311/2312/2313

Unit : mm

Nominal Pipe Size	Run			Outlet			Center To End	
	Outside Dia. OD_1	Outside Dia. ID_1	Wall Thick. T_1	Outside Dia. OD_1	Outside Dia. ID_1	Wall Thick. T_1	C	M
15	21.7	16.1	2.8	21.7	16.1	2.8	25.4	25.4
20	27.2	21.6	2.8	27.2	21.6	2.8	28.6	28.6
20 × 20 × 15	27.2	21.6	2.8	21.7	16.1	2.8	28.6	28.6
25	34.0	27.6	3.2	34.0	27.6	3.2	38.1	38.1
25 × 25 × 20	34.0	27.6	3.2	27.2	21.6	2.8	38.1	38.1
25 × 25 × 15	34.0	27.6	3.2	21.7	16.1	2.8	38.1	38.1
32	42.7	35.7	3.5	42.7	35.7	3.5	47.6	47.6
32 × 32 × 25	42.7	35.7	3.5	34.0	27.6	3.2	47.6	47.6
32 × 32 × 20	42.7	35.7	3.5	27.2	21.6	2.8	47.6	47.6
32 × 32 × 15	42.7	35.7	3.5	21.7	16.1	2.8	47.6	47.6
40	48.6	41.6	3.5	48.6	41.6	3.5	57.2	57.2
40 × 40 × 32	48.6	41.6	3.5	42.7	35.7	3.5	57.2	57.2
40 × 40 × 25	48.6	41.6	3.5	34.0	27.6	3.2	57.2	57.2
40 × 40 × 20	48.6	41.6	3.5	27.2	21.6	2.8	57.2	57.2
40 × 40 × 15	48.6	41.6	3.5	21.7	16.1	2.8	57.2	57.2
50	60.5	52.9	3.8	60.5	52.9	3.8	63.5	63.5
50 × 50 × 40	60.5	52.9	3.8	48.6	41.6	3.5	63.5	60.3
50 × 50 × 32	60.5	52.9	3.8	42.7	35.7	3.5	63.5	57.2
50 × 50 × 25	60.5	52.9	3.8	34.0	27.6	3.2	63.5	50.8
50 × 50 × 20	60.5	52.9	3.8	27.2	21.6	2.8	63.5	44.5
65	76.3	67.9	4.2	76.3	67.9	4.2	76.2	76.2
65 × 65 × 50	76.3	67.9	4.2	60.5	52.9	3.8	76.2	69.9
65 × 65 × 40	76.3	67.9	4.2	48.6	41.6	3.5	76.2	66.7
65 × 65 × 32	76.3	67.9	4.2	42.7	35.7	3.5	76.2	63.5
65 × 65 × 25	76.3	67.9	4.2	34.0	27.6	3.2	76.2	57.2
80	89.1	80.7	4.2	89.1	80.7	4.2	85.7	85.7
80 × 80 × 65	89.1	80.7	4.2	76.3	67.9	4.2	85.7	82.6
80 × 80 × 50	89.1	80.7	4.2	60.5	52.9	3.8	85.7	76.2
80 × 80 × 40	89.1	80.7	4.2	48.6	41.6	3.5	85.7	73.0
80 × 80 × 32	89.1	80.7	4.2	42.7	35.7	3.5	85.7	69.9
90	101.6	93.2	4.2	101.6	93.2	4.2	95.3	95.3
90 × 90 × 80	101.6	93.2	4.2	89.1	80.7	4.2	95.3	92.1
90 × 90 × 65	101.6	93.2	4.2	76.3	67.9	4.2	95.3	88.9
90 × 90 × 50	101.6	93.2	4.2	60.5	52.9	3.8	95.3	82.6
90 × 90 × 40	101.6	93.2	4.2	48.6	41.6	3.5	95.3	79.4
100	114.3	105.3	4.5	114.3	105.3	4.5	104.8	104.8
100 × 100 × 90	114.3	105.3	4.5	101.6	93.2	4.2	104.8	101.6
100 × 100 × 80	114.3	105.3	4.5	89.1	80.7	4.2	104.8	98.4
100 × 100 × 65	114.3	105.3	4.5	86.3	67.9	4.2	104.8	95.3
100 × 100 × 50	114.3	105.3	4.5	60.5	52.9	3.8	104.8	88.9
100 × 100 × 40	114.3	105.3	4.5	48.6	41.6	3.5	104.8	85.7

Nominal Pipe Size	Run			Outlet			Center To End	
	Outside Dia. OD_1	Outside Dia. ID_1	Wall Thick. T_1	Outside Dia. OD_1	Outside Dia. ID_1	Wall Thick. T_1	C	M
125	139.8	130.8	4.5	139.8	130.8	4.5	123.8	123.8
125 × 125 × 100	139.8	130.8	4.5	114.3	105.3	4.5	123.8	117.5
125 × 125 × 90	139.8	130.8	4.5	101.6	93.2	4.2	123.8	114.3
125 × 125 × 80	139.8	130.8	4.5	89.1	80.7	4.2	123.8	111.1
125 × 125 × 65	139.8	130.8	4.5	76.3	67.9	4.2	123.8	108.0
125 × 125 × 50	139.8	130.8	4.5	60.5	52.9	3.8	123.8	104.8
150	165.2	155.2	5.0	165.2	155.2	5.0	142.9	142.9
150 × 150 × 125	165.2	155.2	5.0	139.8	130.8	4.5	142.9	136.5
150 × 150 × 100	165.2	155.2	5.0	114.3	105.3	4.5	142.9	130.2
150 × 150 × 90	165.2	155.2	5.0	101.6	93.2	4.2	142.9	127.0
150 × 150 × 80	165.2	155.2	5.0	89.1	80.7	4.2	142.9	123.8
150 × 150 × 65	165.2	155.2	5.0	76.3	67.9	4.2	142.9	120.7
200	216.3	204.7	5.8	216.3	204.7	5.8	177.8	177.8
200 × 200 × 150	216.3	204.7	5.8	165.2	155.2	5.0	177.8	168.3
200 × 200 × 125	216.3	204.7	5.8	139.8	130.8	4.5	177.8	161.9
200 × 200 × 100	216.3	204.7	5.8	114.3	105.3	4.5	177.8	155.6
200 × 200 × 90	216.3	204.7	5.8	101.6	93.2	4.2	177.8	152.4
250	267.4	254.2	6.6	267.2	254.2	6.6	215.9	215.9
250 × 250 × 200	267.4	254.2	6.6	216.3	204.7	5.8	215.9	203.2
250 × 250 × 150	267.4	254.2	6.6	165.2	155.2	5.0	215.9	193.7
250 × 250 × 125	267.4	254.2	6.6	139.8	130.8	4.5	215.9	190.5
250 × 250 × 100	267.4	254.2	6.6	114.3	105.3	4.5	215.9	184.2
300	318.5	304.7	6.9	318.5	304.7	6.9	254.0	254.0
300 × 300 × 250	318.5	304.7	6.9	267.4	254.2	6.6	254.0	241.3
300 × 300 × 200	318.5	304.7	6.9	216.3	204.7	5.8	254.0	228.6
300 × 300 × 150	318.5	304.7	6.9	165.2	155.2	5.0	254.0	219.1
300 × 300 × 125	318.5	304.7	6.9	139.8	130.8	4.5	254.0	215.9
350	355.6	339.8	7.9	355.6	339.8	7.9	279.4	279.4
350 × 350 × 300	355.6	339.8	7.9	318.5	304.7	6.9	279.4	269.9
350 × 350 × 250	355.6	339.8	7.9	267.4	254.2	6.6	279.4	257.2
350 × 350 × 200	355.6	339.8	7.9	216.3	204.7	5.8	279.4	247.7
350 × 350 × 150	355.6	339.8	7.9	165.2	155.2	5.0	279.4	238.1
400	406.4	390.6	7.9	406.4	390.6	7.9	304.8	304.8
400 × 400 × 350	406.4	390.6	7.9	355.6	339.8	7.9	304.8	304.8
400 × 400 × 300	406.4	390.6	7.9	318.5	304.7	6.9	304.8	295.3
400 × 400 × 250	406.4	390.6	7.9	267.4	254.2	6.6	304.8	282.6
400 × 400 × 200	406.4	390.6	7.9	216.3	204.7	5.8	304.8	273.1
400 × 400 × 150	406.4	390.6	7.9	165.2	155.2	5.0	304.8	263.5
450	457.2	441.4	7.9	457.2	441.4	7.9	342.9	342.9
450 × 450 × 400	457.2	441.4	7.9	406.4	390.6	7.9	342.9	330.2
450 × 450 × 350	457.2	441.4	7.9	355.6	339.8	7.9	342.9	330.2
450 × 450 × 300	457.2	441.4	7.9	318.5	304.7	6.9	342.9	320.7
450 × 450 × 250	457.2	441.4	7.9	267.4	254.2	6.6	342.9	308.0
500	508.0	492.2	7.9	508.0	492.2	7.9	381.0	381.0
500 × 500 × 450	508.0	492.2	7.9	457.2	441.4	7.9	381.0	368.3
500 × 500 × 400	508.0	492.2	7.9	406.4	390.6	7.9	381.0	355.6
500 × 500 × 350	508.0	492.2	7.9	355.6	339.8	7.9	381.0	355.6
500 × 500 × 300	508.0	492.2	7.9	318.5	304.8	6.9	381.0	346.1
500 × 500 × 250	508.0	492.2	7.9	267.4	254.2	6.6	381.0	333.4
500 × 500 × 200	508.0	492.2	7.9	216.3	204.7	5.8	381.0	323.9

STEEL BUTT-WELDING PIPE FITTINGS

Tee

7.9T, STD, X-S

KS B 1543, JIS B 2311/2312/2313

Unit : mm

Nominal Pipe Size	Outside Diameter		Wall Thickness						Center to End	
			7.9T		STD		X-S			
	OD_1	OD_2	T_1	T_2	T_1	T_2	T_1	T_2	C	M
350	355.6	355.6	7.9	7.9	9.5	9.5	12.7	12.7	279.4	279.4
400	406.4	406.4	7.9	7.9	9.5	9.5	12.7	12.7	304.8	304.8
400 × 400 × 350	406.4	355.6	7.9	7.9	9.5	9.5	12.7	12.7	304.8	304.8
400 × 400 × 300	406.4	318.5	7.9	7.9	9.5	9.5	12.7	12.7	304.8	295.3
450	457.2	457.2	7.9	7.9	9.5	9.5	12.7	12.7	342.9	342.9
450 × 450 × 400	457.2	406.4	7.9	7.9	9.5	9.5	12.7	12.7	342.9	330.2
450 × 450 × 350	457.2	355.6	7.9	7.9	9.5	9.5	12.7	12.7	342.9	330.2
450 × 450 × 300	457.2	318.5	7.9	7.9	9.5	9.5	12.7	12.7	342.9	320.7
500	508.0	508.0	7.9	7.9	9.5	9.5	12.7	12.7	381.0	381.0
500 × 500 × 450	508.0	457.2	7.9	7.9	9.5	9.5	12.7	12.7	381.0	368.3
500 × 500 × 400	508.0	406.4	7.9	7.9	9.5	9.5	12.7	12.7	381.0	355.6
500 × 500 × 350	508.0	355.6	7.9	7.9	9.5	9.5	12.7	12.7	381.0	355.6
500 × 500 × 300	508.0	318.5	7.9	7.9	9.5	9.5	12.7	12.7	381.0	346.1
550	558.8	558.8	7.9	7.9	9.5	9.5	12.7	12.7	419.1	419.1
550 × 550 × 500	558.8	508.0	7.9	7.9	9.5	9.5	12.7	12.7	419.1	406.4
550 × 550 × 450	558.8	457.2	7.9	7.9	9.5	9.5	12.7	12.7	419.1	393.7
550 × 550 × 400	558.8	406.4	7.9	7.9	9.5	9.5	12.7	12.7	419.1	381.0
600	609.6	609.6	7.9	7.9	9.5	9.5	12.7	12.7	431.8	431.8
600 × 600 × 550	609.6	558.8	7.9	7.9	9.5	9.5	12.7	12.7	431.8	431.8
600 × 600 × 500	609.6	508.0	7.9	7.9	9.5	9.5	12.7	12.7	431.8	431.8
600 × 600 × 450	609.6	457.2	7.9	7.9	9.5	9.5	12.7	12.7	431.8	419.1
650	660.4	660.4	7.9	7.9	9.5	9.5	12.7	12.7	495.3	495.3
650 × 650 × 600	660.4	609.6	7.9	7.9	9.5	9.5	12.7	12.7	495.3	482.6
650 × 650 × 550	660.4	558.8	7.9	7.9	9.5	9.5	12.7	12.7	495.3	469.9
650 × 650 × 500	660.4	508.0	7.9	7.9	9.5	9.5	12.7	12.7	495.3	457.2
700	711.2	711.2	7.9	7.9	9.5	9.5	12.7	12.7	520.7	520.7
700 × 700 × 650	711.2	660.4	7.9	7.9	9.5	9.5	12.7	12.7	520.7	520.7
700 × 700 × 600	711.2	609.6	7.9	7.9	9.5	9.5	12.7	12.7	520.7	508.0
700 × 700 × 550	711.2	558.8	7.9	7.9	9.5	9.5	12.7	12.7	520.7	495.3
750	762.0	762.0	7.9	7.9	9.5	9.5	12.7	12.7	558.8	558.8
750 × 750 × 700	762.0	711.2	7.9	7.9	9.5	9.5	12.7	12.7	558.8	546.1
750 × 750 × 650	762.0	660.4	7.9	7.9	9.5	9.5	12.7	12.7	558.8	546.1
750 × 750 × 600	762.0	609.6	7.9	7.9	9.5	9.5	12.7	12.7	558.8	533.4

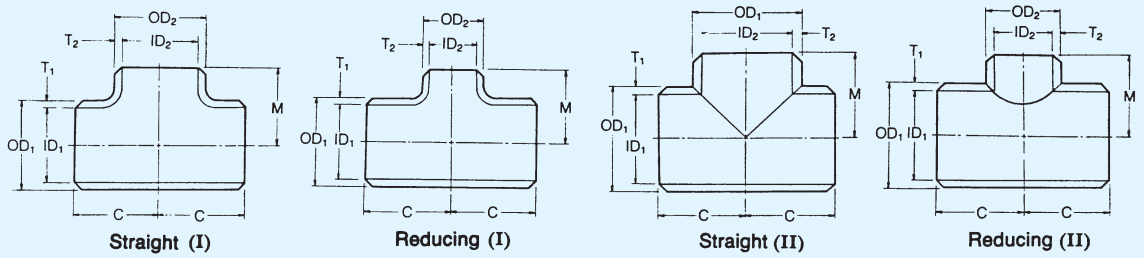

KS B 1543, JIS B 2311/2312/2313

Unit : mm

Nominal Pipe Size	Outside Diameter		Wall Thickness						Center to End	
			7.9T		STD		X-S			
	OD_1	OD_2	T_1	T_2	T_1	T_2	T_1	T_2	C	M
800	812.8	812.8	7.9	7.9	9.5	9.5	12.7	12.7	596.9	596.9
800 × 800 × 750	812.8	762.0	7.9	7.9	9.5	9.5	12.7	12.7	596.9	857.2
800 × 800 × 700	812.8	711.2	7.9	7.9	9.5	9.5	12.7	12.7	596.9	571.5
800 × 800 × 650	812.8	660.4	7.9	7.9	9.5	9.5	12.7	12.7	596.9	571.5
850	863.6	863.6	7.9	7.9	9.5	9.5	12.7	12.7	635.0	635.0
850 × 850 × 800	863.6	812.8	7.9	7.9	9.5	9.5	12.7	12.7	635.0	622.3
850 × 850 × 750	863.6	762.0	7.9	7.9	9.5	9.5	12.7	12.7	635.0	609.6
850 × 850 × 700	863.6	711.2	7.9	7.9	9.5	9.5	12.7	12.7	635.0	596.9
900	914.4	914.4	7.9	7.9	9.5	9.5	12.7	12.7	673.1	673.1
900 × 900 × 850	914.4	863.6	7.9	7.9	9.5	9.5	12.7	12.7	673.1	660.4
900 × 900 × 800	914.4	812.8	7.9	7.9	9.5	9.5	12.7	12.7	673.1	647.7
900 × 900 × 750	914.4	762.0	7.9	7.9	9.5	9.5	12.7	12.7	673.1	635.0
950	965.2	965.2	7.9	7.9	9.5	9.5	12.7	12.7	711.2	711.2
950 × 950 × 900	965.2	914.4	7.9	7.9	9.5	9.5	12.7	12.7	711.2	711.2
950 × 950 × 850	965.2	863.6	7.9	7.9	9.5	9.5	12.7	12.7	711.2	698.5
950 × 950 × 800	965.2	812.8	7.9	7.9	9.5	9.5	12.7	12.7	711.2	685.8
1000	1016.0	1016.0	7.9	7.9	9.5	9.5	12.7	12.7	749.3	749.3
1000 × 1000 × 950	1016.0	965.2	7.9	7.9	9.5	9.5	12.7	12.7	749.3	749.3
1000 × 1000 × 900	1016.0	914.4	7.9	7.9	9.5	9.5	12.7	12.7	749.3	736.6
1000 × 1000 × 850	1016.0	863.6	7.9	7.9	9.5	9.5	12.7	12.7	749.3	723.9
1050	1066.8	1066.8	7.9	7.9	9.5	9.5	12.7	12.7	762.0	711.2
1050 × 1050 × 1000	1066.8	1016.0	7.9	7.9	9.5	9.5	12.7	12.7	762.0	711.2
1050 × 1050 × 950	1066.8	965.2	7.9	7.9	9.5	9.5	12.7	12.7	762.0	711.2
1050 × 1050 × 900	1066.8	914.4	7.9	7.9	9.5	9.5	12.7	12.7	762.0	711.2
1100	1117.6	1117.6	7.9	7.9	9.5	9.5	12.7	12.7	812.8	762.0
1100 × 1100 × 1050	1117.6	1066.8	7.9	7.9	9.5	9.5	12.7	12.7	812.8	762.0
1100 × 1100 × 1000	1117.6	1016.0	7.9	7.9	9.5	9.5	12.7	12.7	812.8	749.3
1100 × 1100 × 950	1117.6	965.2	7.9	7.9	9.5	9.5	12.7	12.7	812.8	736.6
1150	1168.4	1168.4	7.9	7.9	9.5	9.5	12.7	12.7	850.9	800.1
1150 × 1150 × 1100	1168.4	1117.6	7.9	7.9	9.5	9.5	12.7	12.7	850.9	800.1
1150 × 1150 × 1050	1168.4	1066.8	7.9	7.9	9.5	9.5	12.7	12.7	850.9	787.4
1150 × 1150 × 1000	1168.4	1016.0	7.9	7.9	9.5	9.5	12.7	12.7	850.9	774.7
1200	1219.2	1219.2	7.9	7.9	9.5	9.5	12.7	12.7	889.0	838.2
1200 × 1200 × 1150	1219.2	1168.4	7.9	7.9	9.5	9.5	12.7	12.7	889.0	838.2
1200 × 1200 × 1100	1219.2	1117.6	7.9	7.9	9.5	9.5	12.7	12.7	889.0	838.2
1200 × 1200 × 1050	1219.2	1066.8	7.9	7.9	9.5	9.5	12.7	12.7	889.0	812.8

STEEL BUTT-WELDING PIPE FITTINGS

Tee

Sch40, Sch80, Sch120, Sch160

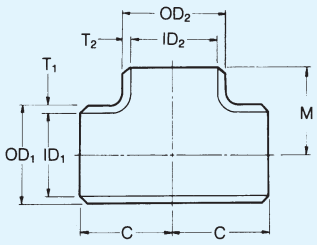

Straight

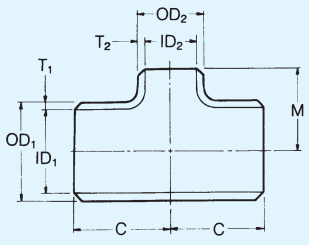

Reducing

KS B 1543, JIS B 2311/2312/2313

Unit : mm

Nominal Pipe Size	Outside Diameter		Sch 40		Sch 80		Sch 120		Sch 160		Center To End	
	OD_1	OD_2	T_1	T_2	T_1	T_2	T_1	T_2	T_1	T_2	C	M
15	21.7	21.7	2.8	2.8	3.7	3.7	-	-	-	-	25.4	25.4
20	27.2	27.2	2.9	2.9	3.9	3.9	-	-	-	-	28.6	28.6
20 × 20 × 15	27.2	21.7	2.9	2.8	3.9	3.7	-	-	-	-	28.6	28.6
25	34.0	34.0	3.4	3.4	4.5	4.5	-	-	-	-	38.1	38.1
25 × 25 × 20	34.0	27.2	3.4	2.9	4.5	3.9	-	-	-	-	38.1	38.1
25 × 25 × 15	34.0	21.7	3.4	2.8	4.5	3.7	-	-	-	-	38.1	38.1
32	42.7	42.7	3.6	3.6	4.9	4.9	-	-	-	-	47.6	47.6
32 × 32 × 25	42.7	34.0	3.6	3.4	4.9	4.5	-	-	-	-	47.6	47.6
32 × 32 × 20	42.7	27.2	3.6	2.9	4.9	3.9	-	-	-	-	47.6	47.6
32 × 32 × 15	42.7	21.7	3.6	2.8	4.9	3.7	-	-	-	-	47.6	47.6
40	48.6	48.6	3.7	3.7	5.1	5.1	-	-	7.1	7.1	57.2	57.2
40 × 40 × 32	48.6	42.7	3.7	3.6	5.1	4.9	-	-	-	-	57.2	57.2
40 × 40 × 25	48.6	34.0	3.7	3.4	5.1	4.5	-	-	-	-	57.2	57.2
40 × 40 × 20	48.6	27.2	3.7	2.9	5.1	3.9	-	-	-	-	57.2	57.2
40 × 40 × 15	48.6	21.7	3.7	2.8	5.1	3.7	-	-	-	-	57.2	57.2
50	60.5	60.5	3.9	3.9	5.5	5.5	-	-	8.7	8.7	63.5	63.5
50 × 50 × 40	60.5	48.6	3.9	3.7	5.5	5.1	-	-	8.7	7.1	63.5	60.3
50 × 50 × 32	60.5	42.7	3.9	3.6	5.5	4.9	-	-	-	-	63.5	57.2
50 × 50 × 25	60.5	34.0	3.9	3.4	5.5	4.5	-	-	-	-	63.5	50.8
50 × 50 × 20	60.5	27.2	3.9	2.9	5.5	3.9	-	-	-	-	63.5	44.5
65	76.3	76.3	5.2	5.2	7.0	7.0	-	-	9.5	9.5	76.2	76.2
65 × 65 × 50	76.3	60.5	5.2	3.9	7.0	5.5	-	-	9.5	8.7	76.2	69.9
65 × 65 × 40	76.3	48.6	5.2	3.7	7.0	5.1	-	-	9.5	7.1	76.2	66.7
65 × 65 × 32	76.3	42.7	5.2	3.6	7.0	4.9	-	-	-	-	76.2	63.5
65 × 65 × 25	76.3	34.0	5.2	3.4	7.0	4.5	-	-	-	-	76.2	57.2
80	89.1	89.1	5.5	5.5	7.6	7.6	-	-	11.1	11.1	85.7	85.7
80 × 80 × 65	89.1	76.3	5.5	5.2	7.6	7.0	-	-	11.1	9.5	85.7	82.6
80 × 80 × 50	89.1	60.5	5.5	3.9	7.6	5.5	-	-	11.1	8.7	85.7	76.2
80 × 80 × 40	89.1	48.6	5.5	3.7	7.6	5.1	-	-	11.1	7.1	85.7	73.0
80 × 80 × 32	89.1	42.7	5.5	3.6	7.6	4.9	-	-	-	-	85.7	69.9
90	101.6	101.6	5.7	5.7	8.1	8.1	-	-	12.7	12.7	95.3	95.3
90 × 90 × 80	101.6	89.1	5.7	5.5	8.1	7.6	-	-	12.7	11.1	95.3	92.1
90 × 90 × 65	101.6	76.3	5.7	5.2	8.1	7.0	-	-	12.7	9.5	95.3	88.9
90 × 90 × 50	101.6	60.5	5.7	3.9	8.1	5.5	-	-	12.7	8.7	95.3	82.6
90 × 90 × 40	101.6	48.6	5.7	3.7	8.1	5.1	-	-	12.7	7.1	95.3	79.4

Nominal Pipe Size	Outside Diameter		Sch 40		Sch 80		Sch 120		Sch 160		Center To End	
	OD_1	OD_2	T_1	T_2	T_1	T_2	T_1	T_2	T_1	T_2	C	M
100	114.3	114.3	6.0	6.6	8.6	8.6	11.1	11.1	13.5	13.5	104.8	104.8
100 × 100 × 90	114.3	101.6	6.0	5.7	8.6	8.1	-	-	13.5	12.7	104.8	101.6
100 × 100 × 80	114.3	89.1	6.0	5.5	8.6	7.6	-	-	13.5	11.1	104.8	98.4
100 × 100 × 65	114.3	76.3	6.0	5.2	8.6	7.0	-	-	13.5	9.5	104.8	95.3
100 × 100 × 50	114.3	60.5	6.0	3.9	8.6	5.5	-	-	13.5	8.7	104.8	88.9
100 × 100 × 40	114.3	48.6	6.0	3.7	8.6	5.1	-	-	13.5	7.1	104.8	85.7
125	139.8	139.8	6.6	6.6	9.5	9.5	12.7	12.7	15.9	15.9	123.8	123.8
125 × 125 × 100	139.8	114.3	6.6	6.0	9.5	8.6	12.7	11.1	15.9	13.5	123.8	117.5
125 × 125 × 90	139.8	101.6	6.6	5.7	9.5	8.1	-	-	15.9	12.7	123.8	114.3
125 × 125 × 80	139.8	89.1	6.6	5.5	9.5	7.6	-	-	15.9	11.1	123.8	111.1
125 × 125 × 65	139.8	76.3	6.6	5.2	9.5	7.0	-	-	15.9	9.5	123.8	108.0
125 × 125 × 50	139.8	60.5	6.6	3.9	9.5	5.5	-	-	15.9	8.7	123.8	104.8
150	165.2	165.2	7.1	7.1	11.0	11.0	14.3	14.3	18.2	18.2	142.9	142.9
150 × 150 × 125	165.2	139.8	7.1	6.6	11.0	9.5	14.3	12.7	18.2	15.9	142.9	136.5
150 × 150 × 100	165.2	114.3	7.1	6.0	11.0	8.6	14.3	11.1	18.2	13.5	142.9	130.2
150 × 150 × 90	165.2	101.6	7.1	5.7	11.0	8.1	-	-	18.2	12.7	142.9	127.0
150 × 150 × 80	165.2	89.1	7.1	5.5	11.0	7.6	-	-	18.2	11.1	142.9	123.8
150 × 150 × 65	165.2	76.3	7.1	5.2	11.0	7.0	-	-	18.2	9.5	142.9	120.7
200	216.3	216.3	8.2	8.2	12.7	12.7	18.2	18.2	23.0	23.0	177.8	177.8
200 × 200 × 150	216.3	165.2	8.2	7.1	12.7	11.0	18.2	14.3	23.0	18.2	177.8	168.3
200 × 200 × 125	216.3	139.8	8.2	6.6	12.7	9.5	18.2	12.7	23.0	15.9	177.8	161.9
200 × 200 × 100	216.3	114.3	8.2	6.0	12.7	8.6	18.2	11.1	23.0	13.5	177.8	155.6
200 × 200 × 90	216.3	101.6	8.2	5.7	12.7	8.1	-	-	23.0	12.7	177.8	152.4
250	267.4	267.4	9.3	9.3	15.1	15.1	21.4	21.4	28.6	28.6	215.9	215.9
250 × 250 × 200	267.4	216.3	9.3	8.2	15.1	12.7	21.4	18.2	28.6	23.0	215.9	203.2
250 × 250 × 150	267.4	165.2	9.3	7.1	15.1	11.0	21.4	14.3	28.6	18.2	215.9	193.7
250 × 250 × 125	267.4	139.8	9.3	6.6	15.1	9.5	21.4	12.7	28.6	15.9	215.9	190.5
250 × 250 × 100	267.4	114.3	9.3	6.0	15.1	8.6	21.4	11.1	28.6	13.5	215.9	184.2
300	318.5	318.5	10.3	10.3	17.4	17.4	25.4	25.4	33.3	33.3	254.0	254.0
300 × 300 × 250	318.5	267.4	10.3	9.3	17.4	15.1	25.4	21.4	33.3	28.6	254.0	241.3
300 × 300 × 200	318.5	216.3	10.3	8.2	17.4	12.7	25.4	18.2	33.3	23.0	254.0	228.6
300 × 300 × 150	318.5	165.2	10.3	7.1	17.4	11.0	25.4	14.3	33.3	18.2	254.0	219.1
300 × 300 × 125	318.5	139.8	10.3	6.6	17.4	9.5	25.4	12.7	33.3	15.9	254.0	215.9
350	355.6	355.6	11.1	11.1	19.0	19.0	27.8	27.8	35.7	35.7	279.4	279.4
350 × 350 × 300	355.6	318.5	11.1	10.3	19.0	17.4	27.8	25.4	35.7	33.3	279.4	269.9
350 × 350 × 250	355.6	267.4	11.1	9.3	19.0	15.1	27.8	21.4	35.7	28.6	279.4	257.2
350 × 350 × 200	355.6	216.3	11.1	8.2	19.0	12.7	27.8	18.2	35.7	23.0	279.4	247.7
350 × 350 × 150	355.6	165.2	11.1	7.1	19.0	11.0	27.8	14.3	35.7	18.2	279.4	238.1
400	406.4	406.4	12.7	12.7	21.4	21.4	30.9	30.9	40.5	40.5	304.8	304.8
400 × 400 × 350	406.4	355.6	12.7	11.1	21.4	19.0	30.9	27.8	40.5	35.7	304.8	304.8
400 × 400 × 300	406.4	318.5	12.7	10.3	21.4	17.4	30.9	25.4	40.5	33.3	304.8	295.3
400 × 400 × 250	406.4	267.4	12.7	9.3	21.4	15.1	30.9	21.4	40.5	28.6	304.8	282.6
400 × 400 × 200	406.4	216.3	12.7	8.2	21.4	12.7	30.9	18.2	40.5	23.0	304.8	273.1
400 × 400 × 150	406.4	165.2	12.7	7.1	21.4	11.0	30.9	14.3	40.5	18.2	304.8	263.5
450	457.2	457.2	14.3	14.3	23.8	23.8	34.9	34.9	45.2	45.2	342.9	342.9
450 × 450 × 400	457.2	406.4	14.3	12.7	23.8	21.4	34.9	30.9	45.2	40.5	342.9	330.2
450 × 450 × 350	457.2	355.6	14.3	11.1	23.8	19.0	34.9	27.8	45.2	35.7	342.9	330.2
450 × 450 × 300	457.2	318.5	14.3	10.3	23.8	17.4	34.9	25.4	45.2	33.3	342.9	320.7

STEEL BUTT-WELDING PIPE FITTINGS

Reducer

SPP/SGP

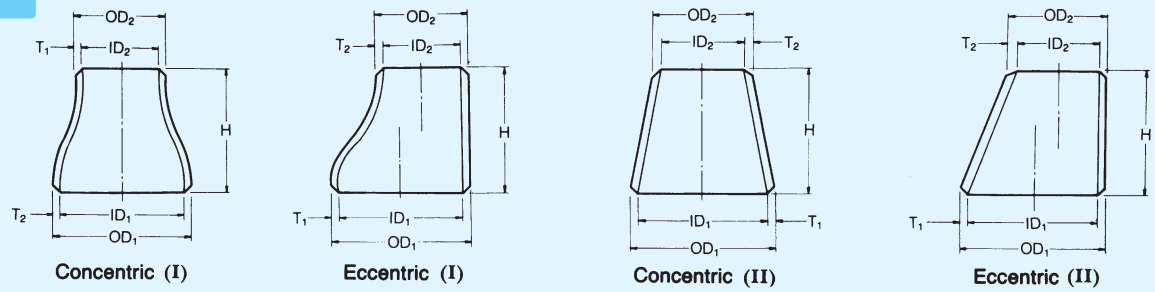

KS B 1543, JIS B 2311/2312/2313

Unit : mm

Nominal Pipe Size	Large End			Small End			End to End
	Outside Diameter OD_1	Inside Diameter ID_1	Wall Thickness T_1	Outside Diameter OD_2	Inside Diameter ID_2	Wall Thickness T_2	H
20 × 15	27.2	21.6	2.8	21.7	16.1	2.8	38.1
25 × 20	34.0	27.6	3.2	27.2	21.6	2.8	50.8
25 × 25	34.0	27.6	3.2	21.7	16.1	2.8	50.8
32 × 25	42.7	35.7	3.5	34.0	27.6	3.2	50.8
32 × 20	42.7	35.7	3.5	37.2	21.6	2.8	50.8
32 × 15	42.7	35.7	3.5	21.7	16.1	2.8	50.8
40 × 32	48.6	41.6	3.5	42.7	35.7	3.5	63.5
40 × 25	48.6	41.6	3.5	34.0	27.6	3.2	63.5
40 × 20	48.6	41.6	3.5	27.2	21.6	2.8	63.5
40 × 15	48.6	41.6	3.5	21.7	16.1	2.8	63.5
50 × 40	60.5	52.9	3.8	48.6	41.6	3.5	76.2
50 × 32	60.5	52.9	3.8	42.7	35.7	3.5	76.2
50 × 25	60.5	52.9	3.8	34.0	27.6	3.2	76.2
50 × 20	60.5	52.9	3.8	27.2	21.6	2.8	76.2
65 × 50	76.3	67.9	4.2	60.5	52.9	3.8	88.9
65 × 40	76.3	67.9	4.2	48.6	41.6	3.5	88.9
65 × 32	76.3	67.9	4.2	42.7	35.7	3.5	88.9
65 × 25	76.3	67.9	4.2	34.0	27.6	3.2	88.9
80 × 65	89.1	80.7	4.2	76.3	67.9	4.2	88.9
80 × 50	89.1	80.7	4.2	60.5	52.9	3.8	88.9
80 × 40	89.1	80.7	4.2	48.6	41.6	3.5	88.9
80 × 32	89.1	80.7	4.2	42.7	35.7	3.5	88.9
90 × 80	101.6	93.2	4.2	89.1	80.7	4.2	101.6
90 × 65	101.6	93.2	4.2	76.3	67.9	4.2	101.6
90 × 50	101.6	93.2	4.2	60.5	52.9	3.8	101.6
90 × 40	101.6	93.2	4.2	48.6	41.6	3.5	101.6
90 × 32	101.6	93.2	4.2	42.7	35.7	3.5	101.6
100 × 90	114.3	105.3	4.5	101.6	93.2	4.2	101.6
100 × 80	114.3	105.3	4.5	89.1	80.7	4.2	101.6
100 × 65	114.3	105.3	4.5	76.3	67.9	4.2	101.6
100 × 50	114.3	105.3	4.5	60.5	52.9	3.8	101.6
100 × 40	114.3	105.3	4.5	48.6	41.6	3.5	101.6
125 × 100	139.8	130.8	4.5	114.3	105.3	4.5	127.0
125 × 90	139.8	130.8	4.5	101.6	93.2	4.2	127.0
125 × 80	139.8	130.8	4.5	89.1	80.7	4.2	127.0
125 × 65	139.8	130.8	4.5	76.3	67.9	4.2	127.0
125 × 50	139.8	130.8	4.5	60.5	52.9	3.8	127.0

KS B 1543, JIS B 2311/2312/2313

Unit : mm

Nominal Pipe Size	Large End			Small End			End to End H
	Outside Diameter OD_1	Inside Diameter ID_1	Wall Thickness T_1	Outside Diameter OD_2	Inside Diameter ID_2	Wall Thickness T_2	
150 × 125	165.2	155.2	5.0	139.8	130.8	4.5	139.7
150 × 100	165.2	155.2	5.0	114.3	105.3	4.5	139.7
150 × 90	165.2	155.2	5.0	101.6	93.2	4.2	139.7
150 × 80	165.2	155.2	5.0	89.1	80.7	4.2	139.7
150 × 65	165.2	155.2	5.0	76.3	67.9	4.2	139.7
200 × 150	216.3	204.7	5.8	165.2	155.2	5.0	152.4
200 × 125	216.3	204.7	5.8	139.8	130.8	4.5	152.4
200 × 100	216.3	204.7	5.8	114.3	105.3	4.5	152.4
200 × 90	216.3	204.7	5.8	101.6	93.2	4.2	152.4
250 × 200	267.4	254.2	6.6	216.3	204.7	5.8	177.8
250 × 150	267.4	254.2	6.6	165.2	155.2	5.0	177.8
250 × 125	267.4	254.2	6.6	139.8	130.8	4.5	177.8
250 × 100	267.4	254.2	6.6	114.3	105.3	4.5	177.8
300 × 250	318.5	304.7	6.9	267.4	254.2	6.6	203.2
300 × 200	318.5	304.7	6.9	216.3	204.7	5.8	203.2
300 × 150	318.5	304.7	6.9	165.2	155.2	5.0	203.2
300 × 125	318.5	304.7	6.9	139.8	130.8	4.5	203.2
350 × 300	355.6	339.8	7.9	318.5	304.7	6.9	330.2
350 × 250	355.6	339.8	7.9	267.4	254.2	6.6	330.2
350 × 200	355.6	339.8	7.9	216.3	204.7	5.8	330.2
350 × 150	355.6	339.8	7.9	165.2	155.2	5.0	330.2
400 × 350	406.4	390.6	7.9	355.6	339.8	7.9	355.6
400 × 300	406.4	390.6	7.9	318.5	304.7	6.9	355.6
400 × 250	406.4	390.6	7.9	267.4	254.2	6.6	355.6
400 × 200	406.4	390.6	7.9	216.3	204.7	5.8	355.6
450 × 400	457.2	441.4	7.9	406.4	390.6	7.9	381.0
450 × 350	457.2	441.4	7.9	355.6	339.8	7.9	381.0
450 × 300	457.2	441.4	7.9	318.5	304.7	6.9	381.0
450 × 250	457.2	441.4	7.9	267.4	254.2	6.6	381.0
500 × 450	508.0	492.2	7.9	457.2	441.4	7.9	508.0
500 × 400	508.0	492.2	7.9	406.4	390.6	7.9	508.0
500 × 350	508.0	492.2	7.9	355.6	339.8	7.9	508.0
500 × 300	508.0	492.2	7.9	318.5	304.7	6.9	508.0

STEEL BUTT-WELDING PIPE FITTINGS

Reducer

7.9T, STD, X-S

KS B 1543, JIS B 2311/2312/2313

Unit : mm

Nominal Pipe Size	Outside Diameter		Wall Thickness T						End to End H
			7.9T		STD		X-S		
	OD_1	OD_2	T_1	T_2	T_1	T_2	T_1	T_2	
400 × 350	406.4	355.6	7.9	7.9	9.5	9.5	12.7	12.7	355.6
450 × 400	457.2	406.4	7.9	7.9	9.5	9.5	12.7	12.7	381.0
450 × 350	457.2	355.6	7.9	7.9	9.5	9.5	12.7	12.7	381.0
500 × 450	508.0	457.2	7.9	7.9	9.5	9.5	12.7	12.7	508.0
500 × 400	508.0	406.4	7.9	7.9	9.5	9.5	12.7	12.7	508.0
500 × 350	508.0	355.6	7.9	7.9	9.5	9.5	12.7	12.7	508.0
550 × 500	558.8	508.0	7.9	7.9	9.5	9.5	12.7	12.7	508.0
550 × 450	558.8	457.2	7.9	7.9	9.5	9.5	12.7	12.7	508.0
550 × 400	558.8	406.4	7.9	7.9	9.5	9.5	12.7	12.7	508.0
550 × 350	558.8	355.6	7.9	7.9	9.5	9.5	12.7	12.7	508.0
600 × 550	609.6	558.8	7.9	7.9	9.5	9.5	12.7	12.7	508.0
600 × 500	609.6	508.0	7.9	7.9	9.5	9.5	12.7	12.7	508.0
600 × 450	609.6	457.2	7.9	7.9	9.5	9.5	12.7	12.7	508.0
600 × 400	609.6	406.4	7.9	7.9	9.5	9.5	12.7	12.7	508.0
650 × 600	660.4	609.6	7.9	7.9	9.5	9.5	12.7	12.7	609.6
650 × 650	660.4	558.8	7.9	7.9	9.5	9.5	12.7	12.7	609.6
650 × 500	660.4	508.0	7.9	7.9	9.5	9.5	12.7	12.7	609.6
650 × 450	660.4	457.2	7.9	7.9	9.5	9.5	12.7	12.7	609.6
700 × 650	711.2	660.4	7.9	7.9	9.5	9.5	12.7	12.7	609.6
700 × 600	711.2	609.6	7.9	7.9	9.5	9.5	12.7	12.7	609.6
700 × 550	711.2	558.8	7.9	7.9	9.5	9.5	12.7	12.7	609.6
700 × 500	711.2	508.0	7.9	7.9	9.5	9.5	12.7	12.7	609.6
750 × 700	762.0	711.2	7.9	7.9	9.5	9.5	12.7	12.7	609.6
750 × 650	762.0	660.4	7.9	7.9	9.5	9.5	12.7	12.7	609.6
750 × 600	762.0	609.6	7.9	7.9	9.5	9.5	12.7	12.7	609.6
750 × 550	762.0	558.8	7.9	7.9	9.5	9.5	12.7	12.7	609.6
800 × 750	812.8	760.0	7.9	7.9	9.5	9.5	12.7	12.7	609.6
800 × 700	812.8	711.2	7.9	7.9	9.5	9.5	12.7	12.7	609.6
800 × 650	812.8	660.4	7.9	7.9	9.5	9.5	12.7	12.7	609.6
800 × 600	812.8	609.6	7.9	7.9	9.5	9.5	12.7	12.7	609.6

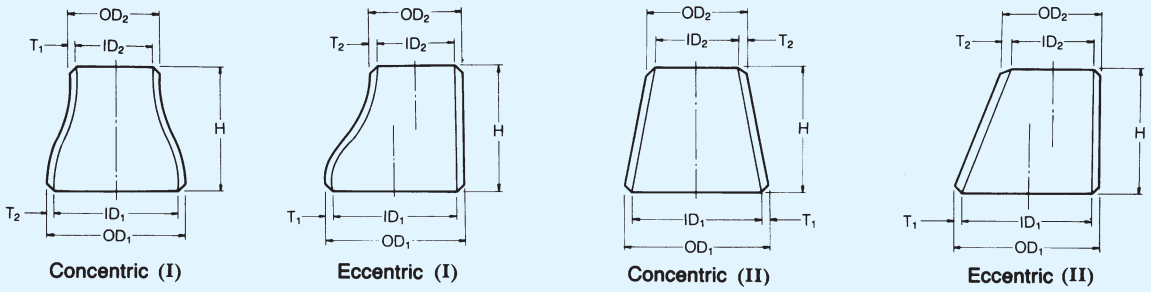

KS B 1543, JIS B 2311/2312/2313

Unit : mm

Nominal Pipe Size	Outside Diameter		Wall Thickness T						End to End H
			7.9T		STD		X-S		
	OD_1	OD_2	T_1	T_2	T_1	T_2	T_1	T_2	
850 × 800	863.6	812.87	7.9	7.9	9.5	9.5	12.7	12.7	609.6
850 × 750	863.6	62.0	7.9	7.9	9.5	9.5	12.7	12.7	609.6
850 × 700	863.6	711.2	7.9	7.9	9.5	9.5	12.7	12.7	609.6
850 × 650	863.6	660.4	7.9	7.9	9.5	9.5	12.7	12.7	609.6
900 × 850	914.4	863.6	7.9	7.9	9.5	9.5	12.7	12.7	609.6
900 × 800	914.4	812.8	7.9	7.9	9.5	9.5	12.7	12.7	609.6
900 × 750	914.4	762.0	7.9	7.9	9.5	9.5	12.7	12.7	609.6
900 × 700	914.4	711.2	7.9	7.9	9.5	9.5	12.7	12.7	609.6
950 × 900	965.2	914.4	7.9	7.9	9.5	9.5	12.7	12.7	609.6
950 × 850	965.2	863.6	7.9	7.9	9.5	9.5	12.7	12.7	609.6
950 × 800	965.2	812.8	7.9	7.9	9.5	9.5	12.7	12.7	609.6
950 × 750	965.2	762.0	7.9	7.9	9.5	9.5	12.7	12.7	609.6
1000 × 950	1016.0	965.2	7.9	7.9	9.5	9.5	12.7	12.7	609.6
1000 × 900	1016.0	914.4	7.9	7.9	9.5	9.5	12.7	12.7	609.6
1000 × 850	1016.0	863.6	7.9	7.9	9.5	9.5	12.7	12.7	609.6
1000 × 800	1016.0	812.8	7.9	7.9	9.5	9.5	12.7	12.7	609.6
1050 × 1000	1066.8	1016.0	7.9	7.9	9.5	9.5	12.7	12.7	609.6
1050 × 950	1066.8	965.2	7.9	7.9	9.5	9.5	12.7	12.7	609.6
1050 × 900	1066.8	914.4	7.9	7.9	9.5	9.5	12.7	12.7	609.6
1050 × 850	1066.8	863.6	7.9	7.9	9.5	9.5	12.7	12.7	609.6
1100 × 1050	1117.6	1066.8	7.9	7.9	9.5	9.5	12.7	12.7	609.6
1100 × 1000	1117.6	1016.0	7.9	7.9	9.5	9.5	12.7	12.7	609.6
1100 × 950	1117.6	965.2	7.9	7.9	9.5	9.5	12.7	12.7	609.6
1100 × 900	1117.6	914.4	7.9	7.9	9.5	9.5	12.7	12.7	609.6
1150 × 1100	1168.4	1117.6	7.9	7.9	9.5	9.5	12.7	12.7	711.2
1150 × 1050	1168.4	1066.8	7.9	7.9	9.5	9.5	12.7	12.7	711.2
1150 × 1000	1168.4	1016.0	7.9	7.9	9.5	9.5	12.7	12.7	711.2
1150 × 950	1168.4	965.2	7.9	7.9	9.5	9.5	12.7	12.7	711.2
1200 × 1150	1219.2	1168.4	7.9	7.9	9.5	9.5	12.7	12.7	711.2
1200 × 1100	1219.2	1117.6	7.9	7.9	9.5	9.5	12.7	12.7	711.2
1200 × 1050	1219.2	1066.8	7.9	7.9	9.5	9.5	12.7	12.7	711.2
1200 × 1000	1219.2	1016.0	7.9	7.9	9.5	9.5	12.7	12.7	711.2

STEEL BUTT-WELDING PIPE FITTINGS

Reducer

Sch40, Sch80, Sch120, Sch160

KS B 1543, JIS B 2311/2312/2313

Unit : mm

Nominal Pipe Size	Outside Diameter		Wall Thickness T						End to End H
			Sch 40		Sch 80		Sch 160		
	OD_1	OD_2	T_1	T_2	T_1	T_2	T_1	T_2	
20 × 15	27.2	21.7	2.9	2.8	3.9	3.7	-	-	38.1
25 × 20	34.0	27.2	3.4	2.9	4.5	3.9	-	-	50.8
25 × 15	34.0	21.7	3.4	2.8	4.5	3.7	-	-	50.8
32 × 25	42.7	34.0	3.6	3.4	4.9	4.5	-	-	50.8
32 × 20	42.7	27.2	3.6	2.9	4.9	3.9	-	-	50.8
32 × 15	42.7	21.7	3.6	2.8	4.9	3.7	-	-	50.8
40 × 32	48.6	42.7	3.7	3.6	5.1	4.9	-	-	63.5
40 × 25	48.6	34.0	3.7	3.4	5.1	4.5	-	-	63.5
40 × 20	48.6	27.2	3.7	2.9	5.1	3.9	-	-	63.5
40 × 15	48.6	21.7	3.7	2.8	5.1	3.7	-	-	63.5
50 × 40	60.5	48.6	3.9	3.7	5.5	5.1	8.7	7.1	76.2
50 × 32	60.5	42.7	3.9	3.6	5.5	4.9	-	-	76.2
50 × 25	60.5	34.0	3.9	3.4	5.5	4.5	-	-	76.2
50 × 20	60.5	27.2	3.9	2.9	5.5	3.9	-	-	76.2
65 × 50	76.3	60.5	5.2	3.9	7.0	5.5	9.5	8.7	88.9
65 × 40	76.3	48.6	5.2	3.7	7.0	5.1	9.5	7.1	88.9
65 × 32	76.3	42.7	5.2	3.6	7.0	4.9	-	-	88.9
65 × 25	76.3	34.0	5.2	3.4	7.0	4.5	-	-	88.9
80 × 65	89.1	76.3	5.5	5.2	7.6	7.0	11.1	9.5	88.9
80 × 50	89.1	60.5	5.5	3.9	7.6	5.5	11.1	8.7	88.9
80 × 40	89.1	48.6	5.5	3.7	7.6	5.1	11.1	7.1	88.9
80 × 32	89.1	42.7	5.5	3.6	7.6	4.9	-	-	88.9
90 × 80	101.6	89.1	5.7	5.5	8.1	7.6	12.7	11.1	101.6
90 × 65	101.6	76.3	5.7	5.2	8.1	7.0	12.7	9.5	101.6
90 × 50	101.6	60.5	5.7	3.9	8.1	5.5	12.7	8.7	101.6
90 × 40	101.6	48.6	5.7	3.7	8.1	5.1	12.7	7.1	101.6
90 × 32	101.6	42.7	5.7	3.6	8.1	4.9	-	-	101.6
100 × 90	114.3	101.6	6.0	5.7	8.6	8.1	13.5	12.7	101.6
100 × 80	114.3	89.1	6.0	5.5	8.6	7.6	13.5	11.1	101.6
100 × 65	114.3	76.3	6.0	5.2	8.6	7.0	13.5	9.5	101.6
100 × 50	114.3	60.5	6.0	3.9	8.6	5.5	13.5	8.7	101.6
100 × 40	114.3	48.6	6.0	3.7	8.6	5.1	13.5	7.1	101.6

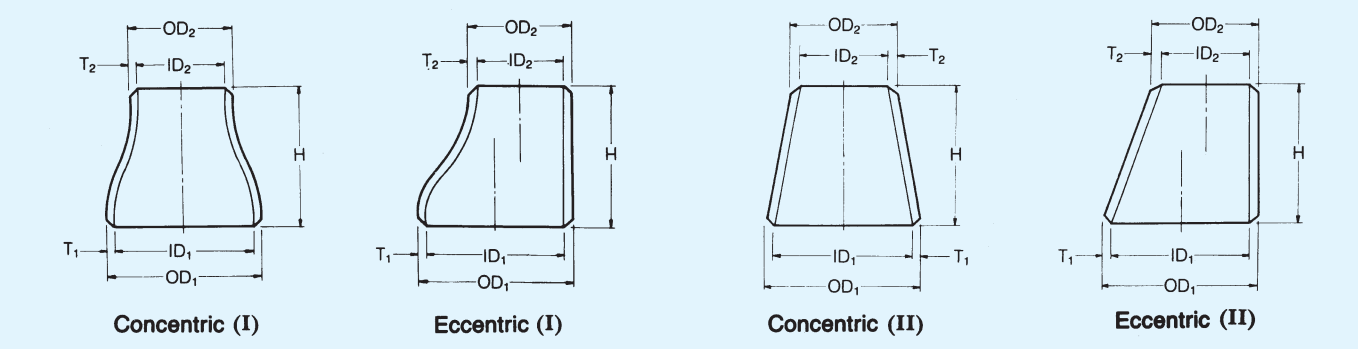

KS B 1543, JIS B 2311/2312/2313

Unit : mm

Nominal Pipe Size	Outside Diameter		Wall Thickness T								End to End H
			Sch 40		Sch 80		Sch 120		Sch 160		
	OD_1	OD_2	T_1	T_2	T_1	T_2	T_1	T_2	T_1	T_2	
125 × 100	139.8	114.3	6.6	6.0	9.5	8.6	12.7	11.1	15.9	13.5	127.0
125 × 90	139.8	101.6	6.6	5.7	9.5	8.1	-	-	15.9	12.7	127.0
125 × 80	139.8	89.1	6.6	5.5	9.5	7.6	-	-	15.9	11.1	127.0
125 × 65	139.8	76.3	6.6	5.2	9.5	7.0	-	-	15.9	9.5	127.0
125 × 50	139.8	60.5	6.6	3.9	9.5	5.5	-	-	15.9	8.7	127.0
150 × 125	165.2	139.8	7.1	6.6	11.0	9.5	14.3	12.7	18.2	15.9	139.7
150 × 100	165.2	114.3	7.1	6.0	11.0	8.6	14.3	11.1	18.2	13.5	139.7
150 × 90	165.2	101.6	7.1	5.7	11.0	8.1	-	-	18.2	12.7	139.7
150 × 80	165.2	89.1	7.1	5.5	11.0	7.6	-	-	18.2	11.1	139.7
150 × 65	165.2	76.3	7.1	5.2	11.0	7.0	-	-	18.2	9.5	139.7
200 × 150	216.3	165.2	8.2	7.1	12.7	11.0	18.2	14.3	23.0	18.2	152.4
200 × 125	216.3	139.8	8.2	6.6	12.7	9.5	18.2	12.7	23.0	15.9	152.4
200 × 100	216.3	114.3	8.2	6.0	12.7	8.6	18.2	11.1	23.0	13.5	152.4
200 × 90	216.3	101.6	8.2	5.7	12.7	8.1	-	-	23.0	12.7	152.4
250 × 200	267.4	216.3	9.3	8.2	15.1	12.7	21.4	18.2	28.6	23.0	177.8
250 × 150	267.4	165.2	9.3	7.1	15.1	11.0	21.4	14.3	28.6	18.2	177.8
250 × 125	267.4	139.8	9.3	6.6	15.1	9.5	21.4	12.7	28.6	15.9	177.8
250 × 100	267.4	114.3	9.3	6.0	15.1	8.6	-	-	28.6	13.5	177.8
300 × 250	318.5	267.4	10.3	9.3	17.4	15.1	25.4	21.4	33.3	28.6	203.2
300 × 200	318.5	216.3	10.3	8.2	17.4	12.7	25.4	18.2	33.3	23.0	203.2
300 × 150	318.5	165.2	10.3	7.1	17.4	11.0	25.4	14.3	33.3	18.2	203.2
300 × 125	318.5	139.8	10.3	6.6	17.4	9.5	25.4	12.7	33.3	15.9	203.2
350 × 300	355.6	318.5	11.1	10.3	19.0	17.4	27.8	25.4	35.7	33.3	330.2
350 × 250	355.6	267.4	11.1	9.3	19.0	15.1	27.8	21.4	35.7	28.6	330.2
350 × 200	355.6	216.3	11.1	8.2	19.0	12.7	27.8	18.2	35.7	23.0	330.2
350 × 150	355.6	165.2	11.1	7.1	19.0	11.0	27.8	14.3	35.7	18.2	330.2
400 × 350	406.4	355.6	12.7	11.1	21.4	19.0	30.9	27.8	40.5	35.7	355.6
400 × 300	406.4	318.5	12.7	10.3	21.4	17.4	30.9	25.4	40.5	33.3	355.6
400 × 250	406.4	267.4	12.7	9.3	21.4	15.1	30.9	21.4	40.5	28.6	355.6
400 × 200	406.4	216.3	12.7	8.2	21.4	12.7	30.9	18.2	40.5	23.0	355.6
450 × 400	457.2	406.4	14.3	12.7	23.8	21.4	34.9	30.9	45.2	40.5	381.0
450 × 350	457.2	355.6	14.3	11.1	23.8	19.0	34.9	27.8	45.2	35.7	381.0
450 × 300	457.2	318.5	14.3	10.3	23.8	17.4	34.9	25.4	45.2	33.3	381.0
450 × 250	457.2	267.4	14.3	9.3	23.8	15.1	34.9	21.4	45.2	28.6	381.0
500 × 450	508.0	457.2	15.1	14.3	26.2	23.8	38.1	34.9	50.0	54.2	508.0
500 × 400	508.0	406.4	15.1	12.7	26.2	21.4	38.1	30.9	50.0	40.5	508.0
500 × 350	508.0	355.6	15.1	11.1	26.2	19.0	38.1	27.8	50.0	35.7	508.0
500 × 300	508.0	318.5	15.1	10.3	26.2	17.4	38.1	25.4	50.0	33.3	508.0

WELDING END PREPARATIONS

KS / JIS

1. Steel Butt-Welding Pipe Fittings for Ordinary Use.

{ KS B1543 / JIS B2311 }

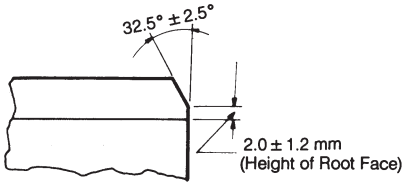

2. Steel Butt-Welding Pipe Fittings for Special Use.

{ KS B1543 / JS B2312/13 }

A: In the Case Where t is 19mm or Less

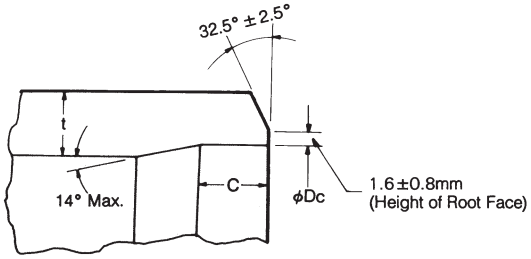

B: In the Case Where t is Over 19mm

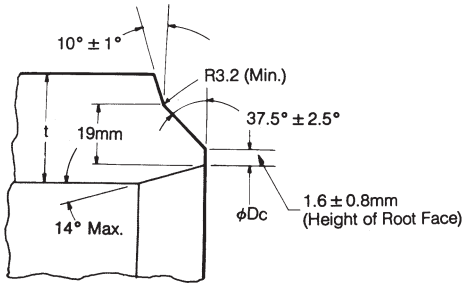

C: In the Case Where t is 19mm or Less

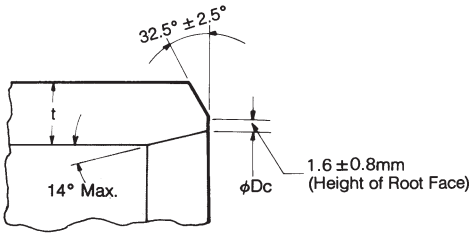

D: In the Case Where t is Over 19mm

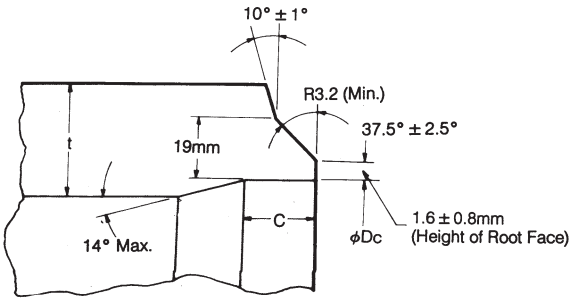

where t : nominal wall thickness
Dc : diameter of machine bore
C : lengh of machining bore

• Remarks

1. Diameter (Dc) and length (C) of machining bore and dimensional tolerances shall be as agreed between parties concerned.

2. Relieving of machining bore may be performed by providing an inclination of 14° or less from the end face to the limits of 1.5 times the wall thickness, or after cutting to the cylindrical surface to the length of machining bore, providing an inclination of 14° of less to the limits above-indicated, and beyond that portion machining with an inclination of 45° or less.

For Types A and B of Bevel Shape

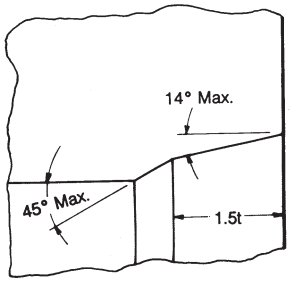

In the figure,
t: nominal wall thickness

For Types C and D of Bevel Shape

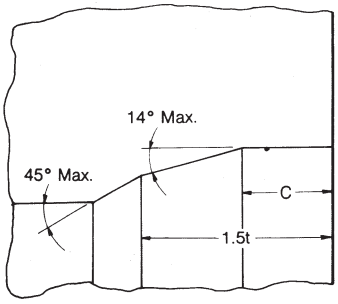

In the figure,
t: nominal wall thickness
c: length of machining bore

Reliveing for outside diameter may be performed by providing an inclination of 30° of less from the end face to the limits of 1.5 times the wall thickness, and beyond that portion machining with an inclination of 45° or less.

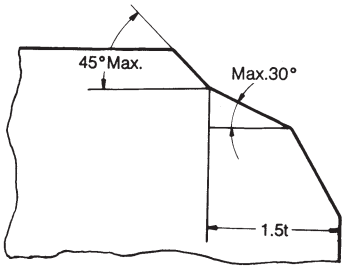

In the figure,
t: nominal wall thickness

3. Steel Plate Butt-Welding Pipe FIttings

{ KS B1543
JIS B2313 }

Where . t ≦ 22.2mm

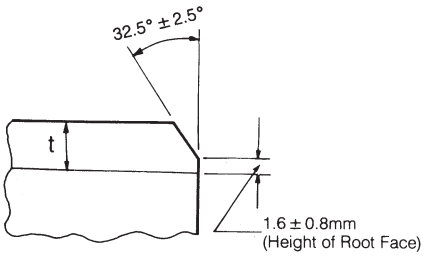

Where . t > 22.2mm

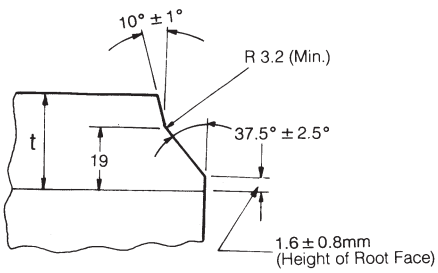

• Remarks : The shape and dimensions of the special bevel ends are referred to the reference clause stated in KS B 1543, JIS B 2311/2312/2313

DIMENSIONAL TOLERANCES

KS / JIS

1. Steel Butt-Welding Pipe Fittings for Ordinary Use.

{KS B 1543 / JIS B 2311}

Item		Type of Pipe Fitting	Nominal Diameter ½ - 2½	3 - 4	5 - 8	10 - 18	20
			Tolerance				
Outside Dia, at end face	(OD)	All pipe FItting	±2	±2.5	±3.5	+5 -4.5	+6.4 -4.8
Inside Dia, at end face	(ID)		±2	±2.5	±3.5	±4.5	±4.8
Wall thickness	(T)		+Not specified -15%				
Center-to-end dimension	(A,B)	90° Elbow 45° Elbow	±2.0		±3.2		±4.8
Center-to-center dimension	(P)	180° Elbow	±6.4		±9.5		-
Back-to-face dimension	(K)		±6.4				-
Alignment of ends (Max.)	(U)		1.6		3.2		-
End-to-end dimension	(H)	Reducer	±2.0		±3.2		
Center-to-end dimension	(C,M)	Tee	±2.0		±3.2		
Back-to-face dimension	(E)	CAP	±3.2		±6.4		

2. Steel Butt-Welding Pipe FIttings for Special Use and Steel Plate Butt-Welding Pipe Fittings.

{KS B 1543 JIS B 2312 JIS B 2313}

Item		Type of Pipe Fitting	Nominal Diameter ½ - 2½	3 - 4	5 - 8	10 - 18	20 - 24	26 - 30	32 - 36
			Tolerance						
Outside Dia, at end face	(OD)	All pipe FItting	+1.6 -0.8	±1.6	+2.4 -1.6	+4 -3.2	+6.4 -4.8		
Inside Dia, at end face	(ID)		±0.8	±1.6		±3.2	±4.8		
Thickness	(T)		+Not specified -12.5%						
Center-to-end dimension	(A,B)	90° Elbow 45° Elbow	±1.6			±2.4		±3.2	±4.8
Center-to-center dimension	(P)	180° Elbow	±6.4			±9.5			
Back-to-face dimension	(K)		±6.4						
Alignment of ends	(U)		· ±0.8 ·· ±1.6			· ±1.6 ·· ±3.2		-	
End-to-end dimension	(H)	Reducer	±1.6			±2.4		±4.8	
Center-to-end dimension	(C,M)	Tee	±1.6			±2.4		±3.2	±4.8
Back-to-face dimension	(E)	CAP	±3.2			±6.4			
Outside of end Peripheral length		All Pipe Fitting						±0.5	

· Application of KS B1541, JIS B2312 ·· Application of KS B 1543, JIS B 2313 • Dimensions are in millimeters

Wrought Steel Butt-Welding Pipe Fittings (Carbon Steel)


90° Elbow(Long)

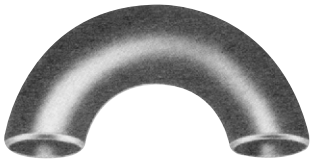
180° Elbow(Long)


Reducer(Concentric)


Reducer(Concentric)


90° Elbow(Short)

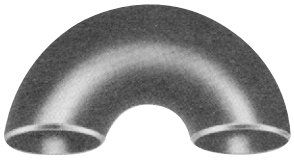
180° Elbow(Short)


Reducer(Eccentric)


Reducer(Eccentric)


45° Elbow(Long)

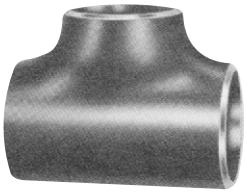
Tee(Straight)

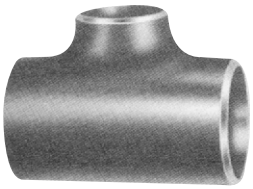
Tee(Reducing)


Cap

Right Angle for shaft-center of Pipe Fittings

KS B 1543 { JIS B 2311, JIS B 2312, JIS B 2313 }

Item	Type of Pipe Fitting	Nominal Diameter							
		½ - 4	5 - 8	10-12	14-16	18-24	26-30	32-42	44-48
		Tolerance							
Off Angle (X)	All pipe Fitting	0.8	1.6	2.4		3.2	4.8		
Off Plane (Y)		1.6	3.2	4.8	6.4	9.5		12.7	19.1

• Dimensions are in millimeters.

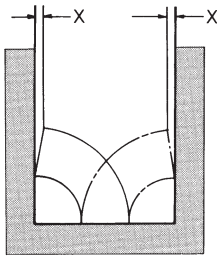

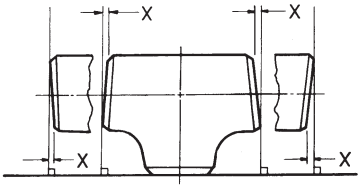

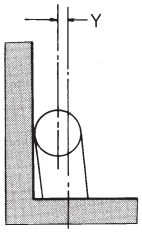

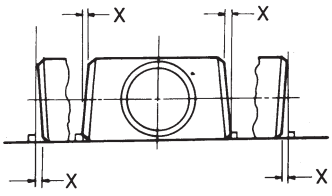

APPROX WEIGHT EQUATION

1. ELBOW

$W = 15.4864 \times \theta / 360 \times F \times T \times (D-T) \times 10^{-5}$

W = Weight (kg)
F = Center to End (mm)
D = Outside Diameter (mm)
T = Wall Thickness (mm)
θ = Angle

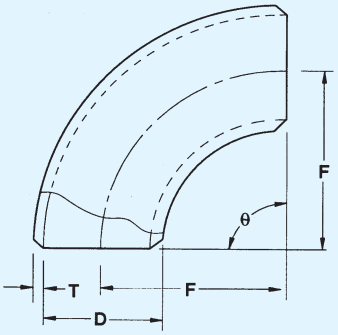

2. TEE

$W = [0.02466\{2Ct_1(OD_1-t_1)+t_2(OD_2-t_2) \times (M-OD_1/2)\} \times 10^{-3} \times K]$

W = Weight (kg)
F = Center to End (mm)
OD_1 = Outside Diameter (mm)
t_1 = Wall Thickness (mm)
OD_2 = Outside Diameter (mm)
t_2 = Wall Thickness (mm)
M = Center to End (mm)
K = 1 (PLATE)
K = 1.363 (PIPE)

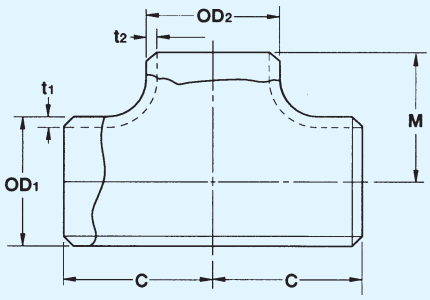

3. REDUCER

$W = 1.232t_1(OD_1+OD_2-2t_1)\,\ell \times 10^{-5}$

$\ell = \sqrt{H^2+\frac{(OD_1-OD_2)^2}{2}}$

W = Weight (kg)
H = End to End (mm)
OD_1 = Large Size Outside Diameter (mm)
OD_2 = Small Size Outside Diameter (mm)
t_1 = Wall Thickness (mm)

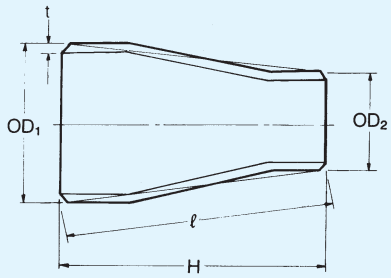

4. CAP

$W = 7.85 \times \frac{\pi}{4}(OD+E)^2 \times t \times 10^{-6}$

W = Weight (kg)
OD = Outside Diameter (mm)
t = Wall Thickness (mm)
E = End to End (mm)

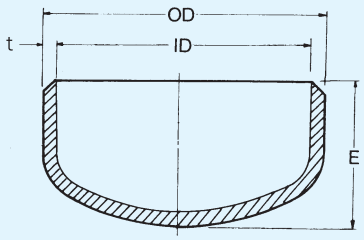

STEEL BUTT-WELDING PIPE FITTINGS

• 90° ELBOWS

Unit : kg

Nominal Pipe Size	Long							Short							Nominal Pipe Size
	SPP(SGP)	STD	S40	X-S	S80	XX-S	S160	SPP(SGP)	STD	S40	X-S	S80	XX-S	S160	
½	0.08	0.08	0.08	0.10	0.10	0.15	0.12	-	-	-	-	-	-	-	½
¾	0.10	0.11	0.11	0.14	0.14	0.22	0.13	-	-	-	-	-	-	-	¾
1	0.15	0.16	0.16	0.20	0.20	0.36	0.25	0.10	0.11	0.11	0.14	0.14	0.22	0.17	1
1¼	0.26	0.26	0.26	0.35	0.35	0.64	0.42	0.17	0.18	0.18	0.23	0.23	0.39	0.28	1¼
1½	0.35	0.37	0.37	0.50	0.50	0.93	0.65	0.24	0.25	0.25	0.33	0.33	0.57	0.43	1½
2	0.64	0.66	0.66	0.99	0.90	1.69	1.33	0.43	0.44	0.44	0.60	0.60	1.13	0.89	2
2½	1.12	1.29	1.29	1.79	1.79	3.43	2.33	0.75	0.91	0.91	1.19	1.19	2.19	1.49	2½
3	1.58	2.04	2.04	2.74	2.74	5.25	3.83	1.05	1.36	1.36	1.83	1.83	3.49	2.55	3
4	2.91	3.84	3.84	5.36	5.36	10.20	8.02	1.94	2.56	2.56	3.58	3.58	6.79	5.35	4
5	4.49	6.48	6.48	9.13	9.13	17.60	14.70	2.99	4.32	4.32	6.09	6.09	11.80	9.79	5
6	7.09	9.94	9.94	15.00	15.00	29.10	24.20	4.73	6.63	6.63	10.00	10.00	19.50	16.20	6
8	14.40	20.10	20.10	30.50	30.50	51.40	53.20	9.61	13.40	13.40	20.30	20.30	34.30	35.50	8
10	25.40	35.40	35.40	47.70	57.00	92.80	103.00	16.90	23.60	23.60	31.80	38.00	61.00	68.60	10
12	38.10	52.00	57.00	68.70	94.00	134.00	171.00	25.40	34.60	38.00	45.80	63.00	89.50	114.00	12
14	56.70	67.90	79.10	89.90	133.00	-	236.00	37.80	45.30	53.00	60.00	89.00	-	158.00	14
16	74.30	89.00	118.00	118.00	195.00	-	350.00	49.50	59.10	79.00	78.30	130.00	-	234.00	16
18	94.20	113.00	169.00	150.00	275.00	-	495.00	62.80	75.30	113.00	99.90	183.00	-	330.00	18
20	116.00	140.00	220.00	186.00	373.00	-	676.00	77.70	93.10	147.00	124.00	249.00	-	451.00	20
22	141.00	169.00	267.00	225.00	493.00	-	886.00	94.10	113.00	178.00	150.00	329.00	-	591.00	22
24	168.00	202.00	366.00	268.00	636.00	-	1160.00	112.00	135.00	244.00	179.00	424.00	-	773.00	24
26	198.00	237.00	430.00	315.00	-	-	-	132.00	158.00	287.00	210.00	-	-	-	26
28	230.00	276.00	500.00	367.00	-	-	-	154.00	184.00	334.00	245.00	-	-	-	28
30	264.00	316.00	575.00	421.00	-	-	-	176.00	211.00	383.00	281.00	-	-	-	30
32	301.00	361.00	654.00	480.00	-	-	-	201.00	241.00	436.00	320.00	-	-	-	32
34	340.00	408.00	739.00	543.00	-	-	-	227.00	272.00	493.00	362.00	-	-	-	34
36	380.00	457.00	904.00	608.00	-	-	-	253.00	304.00	603.00	405.00	-	-	-	36
38	425.00	510.00	-	679.00	-	-	-	283.00	340.00	-	453.00	-	-	-	38
40	471.00	565.00	-	753.00	-	-	-	314.00	377.00	-	502.00	-	-	-	40
42	518.00	622.00	-	828.00	-	-	-	346.00	416.00	-	554.00	-	-	-	42
44	570.00	684.00	-	912.00	-	-	-	380.00	456.00	-	608.00	-	-	-	44
46	623.00	748.00	-	997.00	-	-	-	415.00	499.00	-	665.00	-	-	-	46
48	677.00	814.00	-	1085.00	-	-	-	452.00	543.00	-	724.00	-	-	-	48
50	735.00	884.00	-	1178.00	-	-	-	490.00	589.00	-	786.00	-	-	-	50
52	796.00	956.00	-	1305.00	-	-	-	530.00	637.00	-	870.00	-	-	-	52
54	857.00	1031.00	-	1375.00	-	-	-	572.00	688.00	-	917.00	-	-	-	54
60	926.00	1109.00	-	1480.00	-	-	-	616.00	740.00	-	976.00	-	-	-	60
58	991.00	1190.00	-	1588.00	-	-	-	661.00	794.00	-	1059.00	-	-	-	58
60	1060.00	1274.00	-	1700.00	-	-	-	707.00	849.00	-	1133.00	-	-	-	60

• 45° ELBOW

Unit : kg

Nominal Pipe Size	Long						
	SPP(SGP)	STD	S40	X-S	S80	XX-S	S160
½	0.04	0.04	0.04	0.05	0.05	-	-
¾	0.05	0.06	0.06	0.07	0.07	-	-
1	0.08	0.08	0.08	0.10	0.10	0.18	0.13
1¼	0.13	0.13	0.13	0.18	0.18	0.32	0.21
1½	0.18	0.19	0.19	0.25	0.25	0.47	0.33
2	0.32	0.33	0.33	0.45	0.45	0.85	0.67
2½	0.60	0.69	0.69	0.90	0.90	1.72	1.17
3	0.79	1.02	1.02	1.37	1.37	2.63	1.92
4	1.46	1.92	1.92	2.68	2.68	5.09	4.01
5	2.25	3.24	3.24	4.57	4.57	8.80	7.35
6	3.55	4.97	4.97	7.50	7.50	14.50	12.10
8	7.20	10.10	10.10	15.30	15.30	25.70	26.60
10	12.70	17.70	17.70	23.90	28.50	41.00	51.50
12	19.00	26.00	28.50	34.40	47.00	65.00	85.50
14	28.40	34.00	40.10	45.00	66.50	-	118.00
16	37.20	44.50	59.00	59.00	97.50	-	175.00
18	47.10	56.50	84.50	75.50	138.00	-	247.00
20	58.30	70.00	110.00	93.00	187.00	-	338.00
22	70.50	84.50	-	113.00	257.00	-	443.00
24	84.10	101.00	183.00	134.00	318.00	-	580.00
26	99.00	119.00	-	158.00	-	-	-
28	115.00	138.00	-	184.00	-	-	-
30	132.00	158.00	-	211.00	-	-	-
32	150.00	180.00	327.00	240.00	-	-	-
34	170.00	204.00	369.00	272.00	-	-	-
36	190.00	228.00	452.00	304.00	-	-	-
38	212.00	255.00	-	339.00	-	-	-
40	235.00	282.00	-	376.00	-	-	-
42	259.00	311.00	-	414.00	-	-	-
44	285.00	342.00	-	456.00	-	-	-
46	312.00	374.00	-	498.00	-	-	-
48	339.00	407.00	-	542.00	-	-	-

• CAP

Unit : kg

Nominal Pipe Size	SPP(SGP)	STD	S40	X-S	S80	XX-S	S160
½	0.03	0.04	0.04	0.05	0.05	0.10	0.06
¾	0.04	0.05	0.05	0.07	0.07	0.13	0.09
1	0.08	0.11	0.11	0.15	0.15	0.29	0.20
1¼	0.11	0.14	0.14	0.20	0.20	0.39	0.25
1½	0.15	0.17	0.17	0.24	0.24	0.50	0.35
2	0.23	0.24	0.24	0.33	0.33	0.68	0.54
2½	0.34	0.42	0.42	0.57	0.57	1.33	0.77
3	0.51	0.67	0.67	0.92	0.92	2.18	1.40
4	0.88	1.17	1.17	1.68	1.68	3.80	2.76
5	1.29	1.90	1.90	2.73	2.73	6.22	4.85
6	1.99	2.83	2.83	4.38	4.38	9.85	7.81
8	3.61	5.11	5.11	7.91	7.91	16.40	15.20
10	6.33	8.92	8.92	12.20	16.40	28.35	28.90
12	9.43	13.10	13.10	17.40	26.40	39.40	47.70
14	13.20	15.90	18.60	21.20	34.90	-	61.20
16	16.60	20.00	26.70	26.70	49.00	-	92.80
18	21.20	25.50	41.50	34.10	69.00	-	131.00
20	26.40	31.80	54.10	42.50	93.70	-	179.00
22	31.50	38.80	61.40	51.70	116.00	-	219.00
24	36.60	45.10	90.10	60.10	160.00	-	307.00
26	41.00	50.50	92.30	67.30	-	-	-
28	45.50	56.20	103.00	74.90	-	-	-
30	50.30	62.10	114.00	82.80	-	-	-
32	55.40	68.40	126.00	91.20	-	-	-
34	62.30	75.40	138.00	100.00	-	-	-
36	68.00	81.90	164.00	109.00	-	-	-
38	79.00	94.70	-	126.00	-	-	-
40	95.00	102.00	-	137.00	-	-	-
42	98.00	110.00	-	147.00	-	-	-
44	103.00	126.00	-	167.00	-	-	-
46	111.00	134.00	-	179.00	-	-	-
48	118.00	143.00	-	191.00	-	-	-

BUTT-WELDING FITTINGS APPROX WEIGHT

• **TEE**

Unit : kg

Nominal Pipe Size	SPP(SGP)	STD	S40	X-S	S80	XX-S	S160
½ × ½	0.09	0.09	0.09	0.11	0.11	0.17	0.12
¾ × ¾	0.13	0.13	0.13	0.17	0.17	0.26	0.21
¾ × ½	0.12	0.12	0.12	0.16	0.16	0.24	0.19
1 × 1	0.24	0.25	0.25	0.32	0.32	0.53	0.41
1 × ¾	0.23	0.24	0.24	0.30	0.30	0.49	0.38
1 × ½	0.22	0.23	0.23	0.29	0.29	0.47	0.37
1¼ × 1¼	0.42	0.43	0.43	0.56	0.56	0.95	0.69
1¼ × 1	0.39	0.40	0.40	0.53	0.53	0.89	0.65
1¼ × ¾	0.37	0.37	0.37	0.48	0.48	0.84	0.62
1¼ × ½	0.36	0.36	0.36	0.47	0.47	0.81	0.59
1½ × 1½	0.58	0.61	0.61	0.81	0.81	1.40	1.07
1½ × 1¼	0.56	0.59	0.59	0.78	0.78	1.35	1.01
1½ × 1	0.53	0.56	0.56	0.74	0.74	1.28	0.97
1½ × ¾	0.51	0.53	0.53	0.70	0.70	1.21	0.92
1½ × ½	0.49	0.51	0.51	0.67	0.67	1.17	0.90
2 × 2	0.86	0.88	0.88	1.20	1.20	2.16	1.78
2 × 1½	0.80	0.82	0.82	1.11	1.11	2.00	1.63
2 × 1¼	0.77	0.79	0.79	1.07	1.07	1.91	1.56
2 × 1	0.73	0.75	0.75	1.01	1.01	1.81	1.50
2 × ¾	0.70	0.71	0.71	0.98	0.98	1.76	1.45
2½ × 2½	1.42	1.74	1.74	2.28	2.28	3.92	2.86
2½ × 2	1.32	1.56	1.56	2.06	2.06	3.56	2.64
2½ × 1½	1.25	1.51	1.51	1.98	1.98	3.40	2.48
2½ × 1¼	1.25	1.48	1.48	1.94	1.94	3.32	2.42
2½ × 1	1.18	1.36	1.36	1.80	1.80	3.22	2.36
3 × 3	1.87	2.41	2.41	3.25	3.25	5.90	4.55
3 × 2½	1.79	2.29	2.29	3.07	3.07	5.53	4.23
3 × 2	1.68	2.12	2.12	2.85	2.85	5.18	4.02
3 × 1½	1.62	2.06	2.06	2.77	2.77	5.03	3.87
3 × 1¼	1.60	2.02	2.02	2.74	2.74	4.95	3.80
4 × 4	3.13	4.12	4.12	5.77	5.77	10.60	8.50
4 × 3	.2.92	3.83	3.83	5.33	5.33	9.76	7.92
4 × 2½	2.84	3.71	3.71	5.15	5.15	9.39	7.56
4 × 2	2.72	3.53	3.53	4.94	4.94	9.02	7.34
4 × 1½	2.66	3.48	3.48	4.83	4.83	8.87	7.23
5 × 5	4.53	6.54	6.54	9.20	9.20	17.30	14.80
5 × 4	4.30	6.13	6.13	8.63	8.63	16.10	13.70
5 × 3	4.08	5.83	5.83	8.19	8.19	15.30	13.00
5 × 2½	4.00	5.71	5.71	8.01	8.01	15.00	12.80
5 × 2	3.90	5.58	5.58	7.92	7.92	14.70	12.50
6 × 6	6.84	9.58	9.58	14.50	14.50	27.20	23.30
6 × 5	6.45	9.08	9.08	13.60	13.60	25.60	21.90
6 × 4	6.23	8.67	8.67	13.00	13.00	24.50	20.80
6 × 3	6.01	8.38	8.38	12.60	12.60	23.70	20.10
6 × 2½	5.92	8.36	8.36	12.50	12.50	23.30	19.80
8 × 8	12.80	17.90	17.90	27.10	27.10	45.70	47.20
8 × 6	11.90	16.60	16.60	25.20	25.20	4300	43.50
8 × 5	11.50	16.10	16.10	24.30	24.30	41.40	42.10
8 × 4	11.30	15.70	15.70	23.70	23.70	41.00	40.30
10 × 10	21.80	30.40	30.40	41.00	49.00	79.20	88.00
10 × 8	20.40	28.50	28.50	38.90	45.80	54.40	81.40
10 × 6	19.50	27.20	27.20	37.00	43.90	71.50	78.50
10 × 5	19.20	26.80	26.80	36.20	43.10	70.00	77.00
10 × 4	18.90	26.80	26.80	36.20	42.50	68.90	76.30
12 × 12	32.00	43.60	48.70	57.70	79.20	113.00	143.00
12 × 10	30.40	41.60	45.30	55.20	74.80	107.00	135.00
12 × 8	29.00	39.70	42.50	53.10	71.40	102.00	128.00
12 × 6	28.10	38.40	42.00	51.20	69.50	100.00	125.00
12 × 5	27.80	38.70	41.70	51.20	68.70	98.30	124.00
14 × 14	44.70	53.50	62.40	70.90	104.00	-	186.00
14 × 12	42.70	51.90	60.20	68.80	100.00	-	179.00
14 × 10	41.20	49.90	57.60	66.30	95.90	-	174.00
14 × 8	40.00	48.20	55.80	64.50	92.90	-	168.00
14 × 6	39.00	47.10	54.50	62.60	91.00	-	164.00
16 × 16	55.20	66.10	88.00	87.70	145.00	-	260.00
16 × 14	54.20	64.90	86.00	86.10	140.00	-	255.00
16 × 12	52.70	63.10	84.00	83.60	136.00	-	248.00
16 × 10	51.20	61.30	82.00	81.20	132.00	-	241.00
16 × 8	49.40	59.80	79.00	80.00	129.00	-	235.00
16 × 6	48.50	58.50	77.00	77.80	127.00	-	230.00

Nominal Pipe Size	SPP(SGP)	STD	S40	X-S	S80	XX-S	S160
18 × 18	70.00	83.90	125.00	111.00	204.00	-	326.00
18 × 16	67.90	81.40	121.00	108.00	197.00	-	352.00
18 × 14	66.90	80.20	119.00	106.00	194.00	-	344.00
18 × 12	65.40	78.30	117.00	104.00	189.00	-	337.00
18 × 10	63.40	76.90	114.00	102.00	186.00	-	329.00
20 × 20	86.60	104.00	163.00	138.00	277.00	-	502.00
20 × 18	84.20	101.00	158.00	134.00	268.00	-	488.00
20 × 16	82.10	98.40	154.00	131.00	262.00	-	475.00
20 × 14	81.10	97.20	152.00	129.00	258.00	-	469.00
20 × 12	79.20	96.00	150.00	127.00	254.00	-	462.00
20 × 10	77.60	94.00	147.00	125.00	250.00	-	452.00
20 × 8	76.30	92.10	145.00	123.00	245.00	-	444.00
22 × 22	106.00	126.00	198.00	167.00	365.00	-	657.00
22 × 20	103.00	123.00	193.00	163.00	356.00	-	640.00
22 × 18	101.00	120.00	188.00	159.00	347.00	-	624.00
22 × 16	98.90	117.00	183.00	156.00	340.00	-	610.00
24 × 24	116.00	139.00	252.00	185.00	438.00	-	800.00
24 × 22	115.00	138.00	249.00	183.00	432.00	-	790.00
24 × 20	114.00	136.00	247.00	181.00	427.00	-	782.00
24 × 18	111.00	133.00	241.00	177.00	418.00	-	764.00
26 × 26	147.00	176.00	319.00	234.00	-	-	-
26 × 24	144.00	172.00	312.00	229.00	-	-	-
26 × 22	141.00	169.00	308.00	225.00	-	-	-
26 × 20	138.00	166.00	302.00	221.00	-	-	-
28 × 28	165.00	198.00	359.00	264.00	-	-	-
28 × 26	163.00	197.00	356.00	261.00	-	-	-
28 × 24	160.00	193.00	350.00	256.00	-	-	-
28 × 22	157.00	190.00	347.00	252.00	-	-	-
30 × 30	190.00	228.00	414.00	304.00	-	-	-
30 × 28	188.00	226.00	406.00	301.00	-	-	-
30 × 26	185.00	222.00	356.00	296.00	-	-	-
30 × 24	182.00	218.00	350.00	291.00	-	-	-
32 × 32	217.00	259.00	474.00	347.00	-	-	-
32 × 30	213.00	256.00	466.00	341.00	-	-	-
32 × 28	209.00	252.00	458.00	335.00	-	-	-
32 × 26	208.00	250.00	455.00	335.00	-	-	-
34 × 34	246.00	295.00	535.00	393.00	-	-	-
34 × 32	243.00	292.00	526.00	389.00	-	-	-
34 × 30	238.00	290.00	518.00	380.00	-	-	-
34 × 28	236.00	288.00	511.00	377.00	-	-	-
36 × 36	276.00	331.00	656.00	441.00	-	-	-
36 × 34	271.00	329.00	645.00	434.00	-	-	-
36 × 32	269.00	326.00	636.00	431.00	-	-	-
36 × 30	264.00	323.00	627.00	422.00	-	-	-
38 × 38	308.00	370.00	-	493.00	-	-	-
38 × 36	306.00	367.00	-	489.00	-	-	-
38 × 34	302.00	362.00	-	481.00	-	-	-
38 × 32	298.00	357.00	-	476.00	-	-	-
40 × 40	342.00	411.00	-	547.00	-	-	-
40 × 38	340.00	408.00	-	543.00	-	-	-
40 × 36	335.00	402.00	-	536.00	-	-	-
40 × 34	331.00	397.00	-	529.00	-	-	-
42 × 42	352.00	422.00	-	562.00	-	-	-
42 × 40	350.00	420.00	-	559.00	-	-	-
42 × 38	348.00	418.00	-	557.00	-	-	-
42 × 36	346.00	416.00	-	554.00	-	-	-
44 × 44	396.00	475.00	-	633.00	-	-	-
44 × 42	394.00	473.00	-	630.00	-	-	-
44 × 40	389.00	467.00	-	623.00	-	-	-
44 × 38	385.00	462.00	-	616.00	-	-	-
46 × 46	434.00	521.00	-	695.00	-	-	-
46 × 44	432.00	519.00	-	691.00	-	-	-
46 × 42	427.00	513.00	-	683.00	-	-	-
46 × 40	423.00	507.00	-	676.00	-	-	-
48 × 48	474.00	569.00	-	759.00	-	-	-
48 × 46	472.00	566.00	-	755.00	-	-	-
48 × 44	470.00	564.00	-	751.00	-	-	-
48 × 42	462.00	555.00	-	739.00	-	-	-

• **REDUCER**

Unit : kg

Nominal Pipe Size	SPP(SGP)	STD	S40	X-S	S80	XX-S	S160
¾ × ½	0.06	0.06	0.06	0.08	0.08	-	-
1 × ¾	0.11	0.12	0.12	0.15	0.15	0.25	0.19
1 × ½	0.10	0.11	0.11	0.14	0.14	0.22	0.17
1¼ × 1	0.16	0.16	0.16	0.21	0.21	0.35	0.25
1¼ × ¾	0.15	0.15	0.15	0.19	0.19	0.31	0.23
1¼ × ½	0.13	0.14	0.14	0.18	0.18	-	-
1½ × 1¼	0.24	0.25	0.25	0.33	0.33	0.57	0.43
1½ × 1	0.21	0.22	0.22	0.30	0.30	0.50	0.38
1½ × ¾	0.20	0.21	0.21	0.27	0.27	0.45	0.35
1½ × ½	0.18	0.18	0.18	0.24	0.24	0.40	0.32
2 × 1½	0.37	0.38	0.38	0.51	0.51	0.91	0.75
2 × 1¼	0.35	0.36	0.36	0.48	0.48	0.85	0.70
2 × 1	0.31	0.33	0.33	0.44	0.44	0.77	0.64
2 × ¾	0.29	0.30	0.30	0.40	0.40	0.69	0.58
2½ × 2	0.60	0.73	0.73	0.95	0.95	1.68	1.20
2½ × 1½	0.55	0.67	0.67	0.87	0.87	1.51	1.08
2½ × 1¼	0.52	0.64	0.64	0.83	0.83	1.42	1.02
2½ × 1	0.48	0.56	0.56	0.73	0.73	1.23	0.93
3 × 2½	0.73	0.94	0.94	1.25	1.25	2.25	1.71
3 × 2	0.66	0.85	0.85	1.13	1.13	2.01	1.57
3 × 1½	0.62	0.79	0.79	1.04	1.04	1.83	1.44
3 × 1¼	0.59	0.75	0.75	1.00	1.00	1.74	1.37
4 × 3	1.10	1.45	1.45	2.02	2.02	3.65	3.00
4 × 2½	1.04	1.37	1.37	1.90	1.90	3.41	2.76
4 × 2	0.97	1.27	1.27	1.76	1.76	3.11	2.58
4 × 1½	0.91	1.19	1.19	1.64	1.64	2.89	2.41
5 × 4	1.74	2.50	2.50	3.52	3.52	6.47	5.59
5 × 3	1.58	2.27	2.27	3.18	3.18	5.78	5.30
5 × 2½	1.50	2.16	2.16	3.02	3.02	5.46	4.70
5 × 2	1.41	2.03	2.03	2.85	2.85	5.12	4.43
6 × 5	2.55	3.57	3.57	5.38	5.38	9.89	8.63
6 × 4	2.36	3.30	3.30	4.96	4.96	8.98	7.88
6 × 3	2.18	3.04	3.04	4.56	4.56	8.21	7.21
6 × 2½	2.09	2.94	2.94	4.38	4.38	7.88	6.80
8 × 6	4.17	5.71	5.71	8.63	8.63	14.30	15.00
8 × 5	3.87	5.40	5.40	8.14	8.14	13.40	14.00
8 × 4	3.67	5.10	5.10	7.68	7.68	12.60	13.10
10 × 8	6.87	9.58	9.58	12.90	15.40	24.30	27.50
10 × 6	6.32	8.78	8.78	11.80	14.20	22.10	25.10
10 × 5	6.06	8.42	8.42	11.30	14.50	21.10	23.90
10 × 4	5.80	8.20	8.20	11.00	14.00	20.50	22.60
12 ×10	9.97	13.60	14.70	18.00	24.80	35.00	44.60
12 × 8	9.29	12.70	13.70	16.70	22.70	33.00	41.00
12 × 6	8.69	11.80	12.80	15.60	21.40	32.00	38.00
12 × 5	8.39	11.70	12.60	15.30	20.60	31.00	36.40
14 ×12	21.20	25.40	29.50	33.60	49.80	-	88.50
14 ×10	19.70	23.60	27.40	31.20	46.10	-	81.60
14 × 8	18.30	21.80	25.40	28.90	42.20	-	74.70
14 × 6	16.90	20.30	23.60	26.80	39.10	-	68.30
16 ×14	25.90	31.00	41.10	41.10	67.70	-	121.00
16 ×12	24.10	29.60	39.20	39.20	65.00		116.00
16 ×10	22.40	27.80	36.80	36.80	60.80	-	108.00
16 × 8	21.70	26.20	34.50	34.50	56.60	-	99.90
18 ×16	31.50	37.80	56.20	50.10	91.40	-	165.00
18 ×14	29.80	35.70	53.00	47.40	86.40	-	155.00
18 ×12	27.70	33.20	51.70	44.00	83.00	-	149.00
18 ×10	27.10	32.70	48.40	43.20	78.50	-	140.00

Nominal Pipe Size	SPP(SGP)	STD	S40	X-S	S80	XX-S	S160
20 × 18	47.00	56.40	88.40	74.90	150.00	-	-
20 × 16	44.70	53.50	83.90	71.10	142.00	-	-
20 × 14	42.40	50.80	79.60	67.40	136.00	-	233.00
20 × 12	40.80	49.20	76.90	65.10	130.00	-	-
22 × 20	52.10	62.40	98.00	82.90	181.00	-	-
22 × 18	49.50	59.40	93.20	78.90	172.00	-	-
22 × 16	47.00	56.40	88.40	74.80	164.00	-	-
22 × 14	45.30	54.30	83.60	72.10	156.00	-	-
24 × 22	57.10	68.40	124.00	91.00	215.00	-	-
24 × 20	54.80	65.70	119.00	87.30	206.00	-	-
24 × 18	52.60	63.00	114.00	83.80	197.00	-	-
24 × 16	50.40	60.50	109.00	80.30	185.00	-	-
26 × 24	74.50	89.40	162.00	119.00	-	-	-
26 × 22	71.50	85.80	155.00	114.00	-	-	-
26 × 20	68.50	82.10	148.00	109.00	-	-	-
26 × 18	66.30	79.50	142.00	106.00	-	-	-
28 × 26	80.60	96.60	175.00	129.00	-	-	-
28 × 24	77.50	93.00	168.00	124.00	-	-	-
28 × 22	74.50	89.40	162.00	119.00	-	-	-
28 × 20	72.40	88.80	155.00	115.00	-	-	-
30 × 28	86.60	104.00	188.00	138.00	-	-	-
30 × 26	83.60	100.00	182.00	133.00	-	-	-
30 × 24	80.60	96.60	175.00	129.00	-	-	-
30 × 22	78.50	94.20	168.00	125.00	-	-	-
32 × 30	92.60	111.00	202.00	148.00	-	-	-
32 × 28	89.60	108.00	195.00	143.00	-	-	-
32 × 26	86.60	104.00	188.00	138.00	-	-	-
32 × 24	84.60	102.00	184.00	135.00	-	-	-
34 × 32	98.70	118.00	215.00	158.00	-	-	-
34 × 30	95.60	115.00	208.00	153.00	-	-	-
34 × 28	92.60	111.00	205.00	148.00	-	-	-
34 × 26	90.70	109.00	200.00	148.00	-	-	-
36 × 34	104.60	125.60	250.00	167.30	-	-	-
36 × 32	101.60	122.00	243.00	162.40	-	-	-
36 × 30	98.60	118.40	238.00	157.60	-	-	-
36 × 28	95.60	114.70	234.00	152.80	-	-	-
38 × 36	112.00	133.00	-	177.00	-	-	-
38 × 34	108.00	129.00	-	172.00	-	-	-
38 × 32	105.00	126.00	-	167.00	-	-	-
38 × 30	103.00	124.00	-	165.00	-	-	-
40 × 38	117.00	140.00	-	187.00	-	-	-
40 × 36	114.00	137.00	-	182.00	-	-	-
40 × 34	111.00	133.00	-	177.00	-	-	-
40 × 32	109.00	131.00	-	174.00	-	-	-
42 × 40	123.00	147.00	-	196.00	-	-	-
42 × 38	120.00	144.00	-	192.00	-	-	-
42 × 36	117.00	140.00	-	187.00	-	-	-
42 × 34	115.00	138.00	-	184.00	-	-	-
44 × 42	129.00	155.00	-	206.00	-	-	-
44 × 40	126.00	151.00	-	201.00	-	-	-
44 × 38	123.00	147.00	-	196.00	-	-	-
44 × 36	121.00	146.00	-	194.00	-	-	-
46 × 44	157.00	189.00	-	252.00	-	-	-
46 × 42	154.00	185.00	-	246.00	-	-	-
46 × 40	150.00	180.00	-	241.00	-	-	-
46 × 38	148.00	178.00	-	237.00	-	-	-
48 × 46	164.00	197.00	-	263.00	-	-	-
48 × 44	161.00	193.00	-	257.00	-	-	-
48 × 42	157.00	189.00	-	252.00	-	-	-
48 × 40	155.00	186.00	-	248.00	-	-	-

WALL THICKNESS OF WELDED AND SEAMLESS PIPE

Nominal Pipe Size		Outside Diameter		Nominal Wall Thickness							
A	B	KS/JIS	ANSI	SPP SGP	Sch 5s	Sch 10s	Sch 10	Sch 20s	Sch 20	Sch 30	Sch 40s
6	⅛	10.50	10.29	-	-	1.24	-	1.5	-	-	1.73
8	¼	13.80	13.72	-	-	1.65	-	2.0	-	-	2.24
10	⅜	17.30	17.14	-	-	1.65	-	2.0	-	-	2.31
15	½	21.70	21.34	2.8	1.65	2.11	-	2.5	-	-	2.77
20	¾	27.20	26.67	2.8	1.65	2.11	-	2.5	-	-	2.87
25	1	34.00	33.40	3.2	1.65	2.77	-	3.0	-	-	3.38
32	1 ¼	42.70	42.16	3.5	1.65	2.77	-	3.0	-	-	3.56
40	1 ½	48.60	48.26	3.5	1.65	2.77	-	3.0	-	-	3.68
50	2	60.50	60.32	3.8	1.65	2.77	-	3.5	3.20	-	3.91
65	2 ½	76.30	73.02	4.2	2.11	3.05	-	3.5	4.50	-	5.16
80	3	89.10	88.90	4.2	2.11	3.05	-	4.0	4.50	-	5.49
90	3 ½	101.60	101.60	4.2	2.11	3.05	-	4.0	4.50	-	5.74
100	4	114.30	114.30	4.5	2.77	3.05	-	4.0	4.90	-	6.02
125	5	139.80	141.30	4.5	2.77	3.40	-	5.0	5.10	-	6.55
150	6	165.20	168.30	5.0	2.77	3.40	-	5.0	5.50	-	7.11
200	8	216.30	219.08	5.8	2.77	3.76	-	6.5	6.35	7.04	8.18
250	10	267.40	273.05	6.6	3.40	4.19	-	6.5	6.35	7.80	9.27
300	12	318.50	323.80	6.9	3.96	4.57	-	6.5	6.35	8.38	9.52
350	14	355.60	355.60	7.9	3.96	4.78	6.35	8.0	7.92	9.52	· 9.52
400	16	406.40	406.40	7.9	4.19	4.78	6.35	8.0	7.92	9.52	· 9.52
450	18	457.20	457.20	7.9	4.19	4.78	6.35	8.0	7.92	11.12	· 9.52
500	20	508.00	508.00	7.9	4.78	5.54	6.35	9.5	9.52	12.70	· 9.52
550	22	558.80	558.80	-	4.78	5.54	6.35	-	9.52	12.70	· 9.52
600	24	609.60	609.60	-	5.54	6.35	6.35	-	9.52	14.27	· 9.52
650	26	660.40	660.40	-	-	· 7.92	7.92	-	12.70	-	· 9.52
700	28	711.20	711.20	-	-	· 7.92	7.92	-	12.70	15.88	· 9.52
750	30	762.00	762.00	-	6.35	· 7.92	7.92	-	12.70	15.88	· 9.52
800	32	812.80	812.80	-	-	· 7.92	7.92	-	12.70	15.88	· 9.52
850	34	863.60	863.60	-	-	· 7.92	7.92	-	12.70	15.88	· 9.52
900	36	914.40	914.40	-	-	· 7.92	7.92	-	12.70	15.88	· 9.52
950	38	965.20	965.20	-	-	· 7.92	-	-	-	-	· 9.52
100	40	1016.00	1016.00	-	-	· 7.92	-	-	-	-	· 9.52
1050	42	1066.80	1066.80	-	-	· 7.92	-	-	-	-	· 9.52
1100	44	1117.60	1117.60	-	-	· 7.92	-	-	-	-	· 9.52
1150	46	1168.40	1168.40	-	-	· 7.92	-	-	-	-	· 9.52
1200	48	1219.20	1219.20	-	-	· 7.92	-	-	-	-	· 9.52

• Asterisks(*) denote JINIL BEND Standard as no internationally Recognized standards for these wall thickness have been established.

Nominal Wall Thickness											Nominal Pipe Size Inch
STD	Sch 40	Sch 60	Sch 80s	X-S	Sch 80	Sch 100	Sch 120	Sch 140	Sch 160	XX-S	
1.73	1.73	2.20	2.41	2.41	2.41	-	-	-	3.15	4.83	⅛
2.24	2.24	2.40	3.02	3.02	3.02	-	-	-	3.68	6.05	¼
2.31	2.31	2.80	3.20	3.20	3.20	-	-	-	4.01	6.40	⅜
2.77	2.77	3.20	3.73	3.73	3.73	-	-	-	4.78	7.47	½
2.87	2.87	3.40	3.91	3.91	3.91	-	-	-	5.56	7.82	¾
3.38	3.38	3.90	4.55	4.55	4.55	-	-	-	6.35	9.09	1
3.56	3.56	4.50	4.85	4.85	4.85	-	-	-	6.35	9.70	1¼
3.68	3.68	4.50	5.08	5.08	5.08	-	-	-	7.14	10.16	1½
3.91	3.91	4.90	5.54	5.54	5.54	-	-	-	8.74	11.07	2
5.16	5.16	6.00	7.01	7.01	7.01	-	-	-	9.52	14.02	2½
5.49	5.49	6.60	7.62	7.62	7.62	-	-	-	11.12	15.24	3
5.74	5.74	7.00	8.08	8.08	8.08	-	-	-	-	-	3½
6.02	6.02	7.10	8.56	8.56	8.56	-	11.12	-	13.49	17.12	4
6.55	6.55	8.10	9.53	9.53	9.53	-	12.70	-	15.88	19.05	5
7.11	7.11	9.30	10.97	10.97	10.97	-	14.27	-	18.26	21.94	6
8.18	8.18	10.31	12.70	12.70	12.70	15.09	18.26	20.62	23.01	22.22	8
9.27	9.27	12.70	12.70	12.70	15.09	18.26	21.44	25.40	28.58	25.40	10
9.52	10.31	14.27	12.70	12.70	17.48	21.44	25.40	28.58	33.32	25.40	12
9.52	11.13	15.09	·12.70	12.70	19.05	23.83	27.79	31.75	35.71	-	14
9.52	12.70	16.66	·12.70	12.70	21.44	26.19	30.96	36.52	40.49	-	16
9.52	14.27	19.05	·12.70	12.70	23.82	29.36	34.92	39.67	45.24	-	18
9.52	15.09	20.62	·12.70	12.70	26.19	32.54	38.10	44.45	50.01	-	20
9.52	-	22.22	·12.70	12.70	28.58	34.92	41.28	47.62	53.98	-	22
9.52	17.48	24.61	·12.70	12.70	30.96	38.89	46.02	52.37	59.54	-	24
9.52	-	-	·12.70	12.70	-	-	-	-	-	-	26
9.52	-	-	·12.70	12.70	-	-	-	-	-	-	28
9.52	-	-	·12.70	12.70	-	-	-	-	-	-	30
9.52	17.48	-	·12.70	12.70	-	-	-	-	-	-	32
9.52	17.48	-	·12.70	12.70	-	-	-	-	-	-	34
9.52	19.05	-	·12.70	12.70	-	-	-	-	-	-	36
9.52	-	-	·12.70	12.70	-	-	-	-	-	-	38
9.52	-	-	·12.70	12.70	-	-	-	-	-	-	40
9.52	-	-	·12.70	12.70	-	-	-	-	-	-	42
9.52	-	-	·12.70	12.70	-	-	-	-	-	-	44
9.52	-	-	·12.70	12.70	-	-	-	-	-	-	46
9.52	-	-	·12.70	12.70	-	-	-	-	-	-	48

CARBON STEEL GROOVED FITTINGS (SPP/SGP & SCH40)

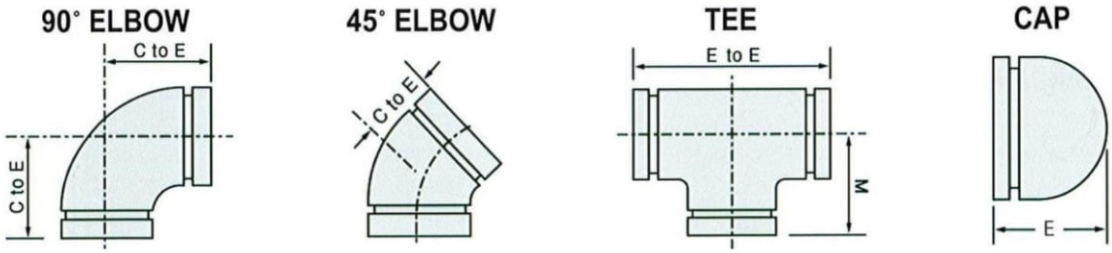

SIZE (A)	O.D mm	90° Elbow			45° Elbow			TEE				CAP		
		C to E mm	SPP W(kg)	Sch40 W(kg)	C to E mm	SPP W(kg)	Sch40 W(kg)	E to E mm	M mm	SPP W(kg)	Sch40 W(kg)	E mm	SPP W(kg)	Sch40 W(kg)
50	60.5	102	0.8	0.9	58.0	0.32	0.33	58.0	78.5	1.2	1.5	50.8	0.23	0.24
65	76.3	105	1.1	1.3	65.0	0.60	0.69	65.0	83.3	1.4	1.7	50.8	0.34	0.42
80	89.1	123	1.6	2.4	72.3	0.79	1.02	72.3	92.7	1.9	2.4	64.0	0.51	0.67
100	114.3	152	2.9	3.8	73.1	1.46	1.92	63.1	110.0	3.1	4.1	76.0	0.88	1.17
125	139.8	191	4.5	6.8	78.9	2.25	3.24	78.9	129.0	4.5	6.5	89.0	1.29	1.90
150	165.2	229	7.1	9.9	94.7	3.55	4.97	94.7	148.0	6.8	9.6	102.0	1.99	2.83
200	216.3	305	14.4	20.1	126.3	7.20	10.10	126.3	177.8	12.8	17.9	127.0	3.61	5.11
250	267.4	381	25.4	35.4	157.8	12.70	17.70	157.8	216.0	21.8	30.4	152.0	6.33	8.92
300	318.5	457	38.1	57.0	189.4	19.00	28.50	189.4	254.0	32.0	47.7	178.0	9.43	13.10
350	355.6	356	56.6	73.9	221.0	28.40	40.10	221.0	279.4	46.9	68.4	191.0	13.20	18.60
400	406.4	406	74.3	118.0	253.0	37.20	59.00	253.0	303.8	57.6	96.4	203.0	16.60	26.70
450	457.2	457	94.2	168.0	284.0	47.10	84.05	284.0	343.0	72.7	137.5	229.0	21.20	41.50
500	508.0	508	117.0	219.0	316.0	58.30	110.00	316.0	381.0	89.5	180.0	254.0	26.40	54.10
550	558.8	559	142.0	-	347.0	70.50	-	347.0	419.1	108.1	-	254.0	31.50	61.40
600	609.6	610	168.0	-	379.0	84.10	183.00	379.0	431.8	119.7	552.0	254.0	36.60	90.00

FLANGE ADAPTER NIPPLE

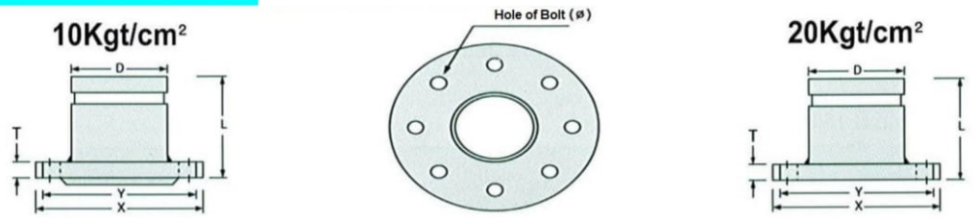

SIZE (A)	X mm 10kgf	Y mm 10kgf	X mm 20kgf	Y mm 20kgf	T mm 10kgf	T mm 20kgf	Hole of Bolt (10kgf)		Hole of Bolt (20kgf)		D mm	L mm	10kgf/ cm² Weight (kg)	20kgf/cm² Weight (kg)
							O.D (Ø)	Q'ty (EA)	O.D (Ø)	Q'ty (EA)				
50	155	120	155	120	16	18	19	4	19	8	60.5	80	2.4	3.2
65	175	140	175	140	18	20	19	4	19	8	76.3	85	3.9	4.7
80	185	150	200	160	18	22	19	8	23	8	89.1	85	4.6	6.6
100	210	175	225	185	18	24	19	8	23	8	114.3	90	7.3	11.1
125	250	210	270	225	20	26	23	8	25	8	139.8	95	8.2	14.7
150	280	240	305	260	22	28	23	8	25	12	165.2	100	11.7	19.7
200	330	290	350	305	22	30	23	12	25	12	216.3	115	18.8	31.9
250	400	355	430	380	24	34	25	12	27	12	267.4	120	27.1	45.7
300	445	400	480	430	24	36	25	16	27	16	318.5	120	40.0	66.3
350	490	445	540	480	26	40	25	16	33	16	355.6	190	-	-
400	560	510	605	540	28	46	27	16	33	16	406.4	220	-	-
450	620	565	675	605	30	48	27	20	33	20	457.2	225	-	-
500	675	620	730	660	30	50	27	20	33	20	508.0	260	-	-
550	745	680	795	720	32	52	33	20	39	20	558.8	280	-	-
600	795	730	845	770	32	54	33	24	39	24	609.6	285	-	-

CARBON STEEL GROOVED FITTINGS (SPP/SGP & SCH40)

REDUCING TEE

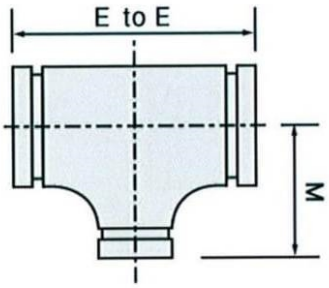

REDUCER

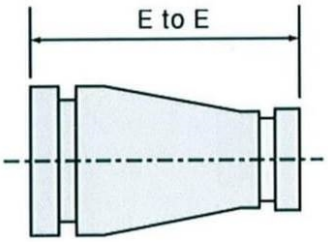

SIZE (A)	Reducing Tee						Reducer		
	O.D1 mm	O.D1 mm	E to E mm	M mm	SPP Weight(kg)	Sch40 Weight(kg)	E to E mm	SPP Weight(kg)	Sch40 Weight(kg)
65 x 50	76.3	60.5	166.5	76.2	1.5	1.7	110.0	0.60	1.1
80 x 50	89.1	60.5	185.4	85.7	1.6	2.0	110.0	0.66	1.5
80 x 65	89.1	76.3	185.4	85.7	1.8	2.1	110.0	0.73	1.7
100 x 50	114.3	60.5	220.0	105.0	2.6	3.5	125.0	0.97	1.9
100 x 65	114.3	76.3	220.0	105.0	2.8	3.7	125.0	1.04	2.2
100 x 80	114.3	89.1	220.0	105.0	2.9	3.8	125.0	1.10	2.3
125 x 65	139.8	76.3	257.6	124.0	3.3	5.7	150.0	1.50	3.4
125 x 80	139.8	89.1	257.6	124.0	4.1	5.8	150.0	1.58	3.6
125 x 100	139.8	114.3	257.6	124.0	4.3	6.1	150.0	1.74	4.0
150 x 80	165.2	89.1	296.0	140.0	5.6	8.5	170.0	2.18	4.3
150 x 100	165.2	114.3	296.0	140.0	6.2	8.7	170.0	2.36	5.4
150 x 125	165.2	139.8	296.0	140.0	6.5	9.1	170.0	2.55	5.9
200 x 100	216.3	114.3	355.6	177.8	10.4	15.8	190.0	3.67	7.4
200 x 125	216.3	139.8	355.6	177.8	11.5	16.1	190.0	3.87	7.9
200 x 150	216.3	165.2	355.6	177.8	11.9	16.6	190.0	4.17	8.4
250 x 125	267.4	139.8	432.0	216.0	17.2	25.7	220.0	6.06	12.2
250 x 150	267.4	165.2	432.0	216.0	19.5	27.2	220.0	6.32	12.9
250 x 200	267.4	216.3	432.0	216.0	20.4	28.5	220.0	6.87	14.1
300 x 125	318.5	139.8	508.0	235.0	26.4	39.7	260.0	8.39	18.1
300 x 150	318.5	165.2	508.0	254.0	27.2	40.2	260.0	8.69	19.2
300 x 200	318.5	216.3	508.0	254.0	29.0	42.5	260.0	9.29	19.5
300 x 250	318.5	267.4	508.0	254.0	30.4	45.3	260.0	9.97	19.7
350 x 250	355.6	267.4	559.0	270.0	45.5	65.9	330.0	19.70	32.5
350 x 300	355.6	318.5	559.0	270.0	43.8	63.0	330.0	21.20	30.2
400 x 300	406.4	318.5	609.6	304.8	55.0	90.5	355.6	24.10	43.7
400 x 350	406.4	355.6	609.6	304.8	56.5	93.2	355.6	25.90	45.2
450 x 350	457.2	355.6	609.6	330.0	79.3	128.0	381.0	29.80	67.0
450 x 400	457.2	406.4	685.8	330.0	60.4	132.0	381.0	31.50	52.0
500 x 400	508.0	406.4	685.8	370.0	84.8	169.0	508.0	44.70	92.0
500 x 450	508.0	457.2	762.0	370.0	94.1	174.0	508.0	47.00	97.4
550 x 450	558.8	457.2	762.0	410.0	107.9	-	508.0	49.50	-
550 x 500	558.8	508.0	838.2	410.0	105.4	-	508.0	52.10	-
600 x 500	609.6	508.0	838.2	431.8	116.9	-	508.0	54.80	-
600 x 550	609.6	558.8	863.6	431.8	118.3	-	508.0	57.10	-

GROOVED SPECIFICATION (Roll Grooved)

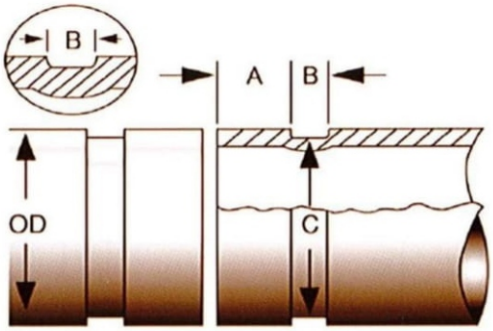

❖ SPECIFICATION OF CARBON STEEL PIPE (SPP) ROLL GROOVE

SIZE (A)	Gasket A		Width of Grooved B		Grooved Diameter C		Maximum size of 2 ends mm
	Standard mm	Tolerance mm	Standard mm	Tolerance mm	Standard mm	Tolerance mm	
50	15.88	± 0.76	15.88	± 0.76	57.15	- 0.38	63.0
65	15.88	± 0.76	15.88	± 0.76	72.26	- 0.46	78.7
80	15.88	± 0.76	15.88	± 0.76	84.94	- 0.46	91.4
100	15.88	± 0.76	15.88	± 0.76	110.08	- 0.51	116.8
125	15.88	± 0.76	15.88	± 0.76	135.48	- 0.51	142.2
150	15.88	± 0.76	15.88	± 0.76	160.78	- 0.56	167.6
200	19.05	± 0.76	19.05	± 0.76	211.60	- 0.64	220.7
250	19.05	± 0.76	19.05	± 0.76	262.60	- 0.69	271.8
300	19.05	± 0.76	19.05	± 0.76	312.90	- 0.76	322.8
350	23.83	± 0.76	23.83	± 0.76	350.04	- 0.76	358.1
400	23.83	± 0.76	23.83	± 0.76	400.84	- 0.76	408.9
450	25.40	± 0.76	25.40	± 0.76	451.64	- 0.76	461.3
500	25.40	± 0.76	25.40	± 0.76	502.44	- 0.76	512.1
550	25.40	± 0.76	25.40	± 0.76	550.06	- 0.76	563.9
600	25.40	± 0.76	25.40	± 0.76	600.86	- 0.76	614.7

❖ SPECIFICATION OF CARBON STEEL PIPE (SPP) ROLL GROOVE

`SIZE (A)	Gasket A		Width of Grooved B		Grooved Diameter C		Maximum size of 2 ends mm
	Standard mm	Tolerance mm	Standard mm	Tolerance mm	Standard mm	Tolerance mm	
50	15.88	± 0.76	8.74	± 0.76	60.46	- 0.46	60.5~61.7
65	15.88	± 0.76	8.74	± 0.76	72.26	- 0.46	75.5~78.7
80	15.88	± 0.76	8.74	± 0.76	84.94	- 0.46	78.5~91.4
100	15.88	± 0.76	8.74	± 0.76	110.08	- 0.51	112.7~116.8
125	15.88	± 0.76	8.74	± 0.76	135.48	- 0.51	138.2~142.2
150	15.88	± 0.76	8.74	± 0.76	160.78	- 0.56	163.6~167.6
200	19.05	± 0.76	11.91	± 0.76	211.60	- 0.64	214.7~220.7
250	19.05	± 0.76	11.91	± 0.76	262.60	- 0.69	264.2~271.8
300	19.05	± 0.76	11.91	± 0.76	312.90	- 0.76	315.3~322.8
350	23.83	± 0.76	11.91	± 0.76	350.04	- 0.46	358.1
400	23.83	± 0.76	11.91	± 0.76	400.84	- 0.46	408.9

Major Performance Record

No.	PROJECT NAME	ADDRESS	TIME
1	**RESIDENTIAL MULTI-FUNCTION**	Cau Giay Dist.- HaNoi City.	2007
2	**PHU QUOC AIRPORT**	Phu Quoc Island	2008
3	**BECAMEX TOWER**	Thu Dau Mot City - Binh Duong Province.	
4	**LONG BINH AN I.P**	Tuyen Quang Province.	
5	**THE MƠ MARKET TRADING CENTER**	Hai Ba Trung Dist.- HaNoi City.	2009
6	**BUNGE VIET NAM Co.,Ltd**	Phu My 1 I.P - Ba Ria-Vung Tau Province.	
7	**PROCESSING ALCOHOL BEER HIGH QUALITY PLANT**	TBS Song Tra I.P – Tan Binh Commune - Thai Binh Province	
8	**PARLIAMENT BUILDING**	Opposite with Royal Tombs of Ho Chi Minh President - Ba Dinh Square - HaNoi City.	2010
9	**PETRO LANDMARK**	Multi-Function Area Phu My Hung - Dist.7 – HCM.C.	
10	**DANA - ITALIA STEEL**	Lien Chieu Dist.- DaNang City.	
11	**TRANG TIEN PLAZA (TRADING CENTER)**	Hoan Kiem Dist.- HaNoi City.	2011
12	**TH TRUE MILK MANUFACTORY**	Nghia Trung Commune - Nghia Dan Dist.- Nghe An Province.	
13	**TOTAL GAS OIL STORAGE VIET NAM**	Tan Thuan Đong ward - Dist. 7 – HCM.C.	
14	**TUY HOA AIRPORT**	Phu Thanh Ward - Tuy Hoa Dist. - Phu Yen Province.	2012
15	**LIXIL MANUFACTORY**	Long Duc I.P – Long Thanh – Dong Nai Province	
16	**NAM DINH POLICE OFFICE**	Highway 10 – Loc Vuong ward – Nam Dinh City.	
17	**SAMSUNG ELECTRONIC VIETNAM THAI NGUYEN (SEVT)**	Yen Binh - Pho Yen - Thai Nguyen City	2013
18	**LG MANUFACTORY IN HAIPHONG**	Trang Due-Dinh Vu, Cat Hai-Hai Phong City	
19	**HOANG ANH GIA LAI MYANMAR HOTEL**	Bahan Township-Yangon-Myanmar	

20	**AEON LONG BIEN**	Phuc Dong & Long Bien Ward – Long Bien Dist. – Ha Noi	2014
21	**VINMEC HOSPIPTAL**	Tan Cang – Binh Thanh Dist.- HoChiMinh City	
22	**DONG YANG ELECTRONIC HAI PHONG**	Trang Due I.P – Cat Hai – Anh Duong – Hai Phong	
23	**AEON BINH TAN**	Hoa Lam Shangrila High-Tech Medical – Binh Tan Dist. – HoChiMinh City	2015
24	**SAMSUNG CE Complex HCM city**	Saigon Hi-Technical I.P-Tang Nhon Phu B –Dist.9 - HCM.C	
25	**NUMBER ONE BEVERAGES FACTORY**	Bac Chu Lai I.P-Tam Hiep Commune-Nui Thanh Dist.-Quang Nam Province	
26	**LG Display VietNam**	Trang Due-Dinh Vu, Cat Hai-Hai Phong City	2016
27	**NITORI FURNITURE VIET NAM**	Phu My 3 I.P-Tan Thanh Dist.-Ba Ria Vung Tau Province.	
28	**NIPPON MEKTRON MANUFACTORY**	Thang Long II I.P-Di Su Commune-My Hao Dist.-Hung Yen Province	
29	**AEON MALL PP2**	Khan Chamkarrmon, Phnom Penh, Cambod.	2017
30	**FIRST SOLAR MANUFACTORY**	Dong Nam I.P-Cu Chi Dist.-HCM City	
31	**VINFAST HAIPHONG**	Cat Hai Island-Cat Hai Dist.-Hai Phong City	
32	**NIPRO MANUFACTORY**	Hi-Tech I.P-Dist.9-HCM City	
33	**HOI AN CASINO**	Thang Binh-Quang Nam Province.	2018
34	**DENEAST MANUFACTORY**	VSIP II-Binh Duong Province.	
35	**ONE VERANDAH**	Thanh My Loi Residence-Thanh My Loi Ward-District 2-HCM City.	

It continues at forwarding...

COMPARISON OF ASTM SPECIFICATIONS

Steel Composition	ASTM Specification and Grade				KS Speicfication and Grade		
	Marking Symbol	Pipe	Plate	Forging	Marking Symbol	Pipe	Plate
Carbon Steel	-	A120	A283-A	-	SPP	SPP	SB41
	-	A53-B	A284	-	PS38(W), PS38, PT38(W), PT38	SPPS38	SWS41B
	-	A53-B	A284	-	PS42(W), PS42, PT42(W), PT42	SPPS42	SWS41B
					HT38, HT38(W)	SPHT38	SBB42
	WPB	A106-B	A515-60 or 70 A516-60 or 70	A105	HT42, HT42(W)	SPHT42	SBB42
	WPC	A106-C	A515-70 A516-70	A105	HT49, HT49(W)	SPHT49	SBB49
Low Temperature Steel	WPL6	A333 and A334-6	A516-60	A350-LF2	PL39	SPHL39	SLAL39
	WPL3	A333 and A334-3	A203-D	A350-LF3	-	-	-
	WPL9	A333 and A334-9	A203-A	A350-LF9	-	-	-
Alloy Steel	WP1	A335-P1	A203-B	A182-F1	PA12, FA12	SPA12	SBB46M
	WP12	A335-P12	A387-12	A182-F12	PA22, FA22	SPA22	SCMV2
	WP11	A335-P11	A387-11	A182-F11	PA23, FA23	SPA23	SCMV3
	WP22	A3335-P22	A387-22	A182-F22	PA24, FA24	SPA24	SCMV4
	WP5	A335-P5	A387-5	A182-F5	PA25, FA25	SPA25	SCMV6
	WP7	A335-P7	A387-7	A182-F7	-	-	-
	WP9	A335-P9	A387-9	A182-F9	-	-	-
Stainless Steel	WP304	A312-TP304	A240-Type 304	A182-F304	STS304, STS304W, STS304F	STS304TP	STS304
	WP304H	A312-TP304H	A240-Type 304H	A182-F304H	-	-	-
	WP304L	A312-TP304L	A240-Type 304L	A182-F304L	STS304L, STS304LW, STS304LF	STS304LTP	STS304L
	WP309	A312-TP309	A240-Type 309S	-	STS309S, STS309SW, STS309SF	STS309STP	STS309S
	WP310	A312-TP310	A240-Type 310S	A182-F310	STS310S, STS310SW, STS310SF	STS310STP	STS310S
	WP316	A312-TP316	A240-Type 316	A182-F316	STS316, STS316W, STS316F	STS316TP	STS316
	WP316H	A312-TP316H	A240-Type 316H	A182-F316H	STS316H, STS316HF	STS316HTP	-
	WP316L	A312-TP316L	A240-Type L	A182-F316L	STS316. STS316LW, STS316LF	STS316LTP	STS316L
	WP317L	A312-TP317L	A240-Type 317L	A182-F317L	STS317L, STS317LW	STS317LTP	STS317L
	WP321	A312-TP321	A240-Type 321	A182-F321	STS321, STS321W, STS321F	STS321TP	STS321
	WP321H	A312-TP321H	A240-Type 321H	A182-F321H	-	-	-
	WP347	A312-TP347	A240-Type 347	A182-F347	STS347, STS347W, STS347F	STS347TP	STS347
	WP347H	A312-TP347H	A240-Type 347H	A182-F347H	STS347H, STS347HF	STS347HTP	-

JIS Specification and Grade			B.S.Specification and Grade	DIN Specification and Grade	Steel Composition
Marking Symbol	Pipe	Plate	Pipe	Pipe	
FSGP or SGP	SGP(STPY400)	SS400	1387-M	2440-ST33-1	Carbon Steel
PG370(W), PS370(W), PT370	STPG370	SM41B	3602-ERW23	1626-ST37	Carbon Steel
PG410(W), PS410(W), PT410(W), PT410	STPG410	SM41B	3602-ERW27	-	Carbon Steel
PS370, PT370(W)	STPT370	SB42	3602-Steel23	17175-ST35.8	Carbon Steel
PS410, P(410(W)	STPT410	SB42	3602-Steel27	17175-ST35.8	Carbon Steel
PS480, PT480(W)	STPT480	SB49	3602-Steel35	-	Carbon Steel
PL380(W)	STPL380	-	3603-Steel27 LT 30	-	Carbon Steel
PL450(W)	STPL450	-	3603-Steel503 LT100	-	3½% Ni Steel
PL690(W)	STPL690	-	-	-	2% Ni 1% Cu Steel
PA12(W), FA12	STPA12	-	-	17175-15 Mo3	Carbon-Molybdenum Steel
PA22(W), FA22	SPTA22	-	3603-HF620	17175-13 Cr Mo44	1% Cr-½% Molybdenum Steel
PA23(W), FA23	STPA23	-	3603-HF621	-	1¼% Cr-½% Molybdenum Steel
PA24(W), FA24	STPA24	SCMV4	3603-HF622,27	17175-10 Cr Mo910	2¼% Cr-1% Molybdenum Steel
PA25(W), FA25	STPA25	-	3603-HF625	-	5% Cr-½% Molybdenum Steel
-	-	-	-	-	7% Cr-½% Molybdenum Steel
FA26(W), FA26	STPA26	-	-	-	9% Cr-½% Molybdenum Steel
SUS304, SUS304W, SUS304F	SUS304TP	SUS304	3605-801	17440-X5 Cr Ni189	18% Cr-8% Ni Steel
SUS304H, SUS304HF	SUS304HTP	-	3605-811	-	18% Cr-8% Ni-(0.04-0.10)% C Steel
SUS304L, SUS304LW	SUS304LTP	SUS304L	3605-811L	17440-X2 Cr Ni189	18% Ni-0.035% C Steel
SUS309S, SUS309SW, SUS309SF	SUS309STP	SUS309S	-	-	22% Cr-12% Ni Steel
SUS310S, SUS310W, SUS310F	SUS310STP	SUS310S	3605-805S	-	25% Cr-20% Ni Steel
SUS316, SUS316W, SUS316F	SUS316TP	SUS316	3605-845	17440-X5 Cr Ni Mo1810	18% Cr-8% Ni-Mo Steel
SUS316H, SUS316HF	SUS316HTP	-	3605-855	-	18% Cr-8% Ni-Mo(0.04-0.10)% C Steel
SUS316L, SUS316LW	SUS316LTP	SUS316L	3605-845L	17440-X2 Cr Ni Mo1810	18% Cr-8% Ni-Mo-0.035% C Steel
SUS317L	SUS317LTP	SUS317L	-	-	18% Cr-12% Ni-3.5% Mo-Low C
SU321, SUS321W, SUS321F	SUS321TP	SUS321	3605-822Ti	17440-X10 Cr Ni Ti189	18% Cr-8% Ni-Ti Steel
SUS321H, SUS321HF	SUS321HTP	-	3605-832Ti	-	18% Cr-8% Ni-Ti-(0.04-0.10)% C Steel
SUS347, SUS347W, SUS347F	SUS347TP	SUS347	3605-822Nb	17440-X1 Cr Ni Nb189	18% Cr-8% Ni-Cb+Ta Steel
SUS347H, SUS347HF	SUS347HTP	-	3605-832Nb	-	18% Cr-8% Ni-Cb+Ta(0.04-0.10)% C Steel

MATERIALS SPECIFICATIONS FOR BUTT-WELDING

Marking Symbols		Materials	Form	Chemical Composition (Percent) Max. or Range (Unless otherwise indicated)					
				C	Si	Mn	P	S	Ni
A234	WPB	A106 Gr. B	P	0.30	0.10 Min.	0.29-1.06	0.048	0.058	-
		A515 Gr. 65	PL	0.28-0.33	0.13-0.33	0.90	0.035	0.040	-
		A515 Gr. 70	PL	0.31-0.35	0.13-0.33	0.90	0.035	0.040	-
	WPC	A106 Gr. C	P	0.35	0.10 Min.	0.29-1.06	0.048	0.058	-
	WP1	A335 Gr. P1	P	0.10-0.20	0.10-0.50	0.30-0.80	0.045	0.055	-
		A204 Gr. B	PL	0.20-0.27	0.13-0.32	0.90	0.035	0.040	-
	WP12	A335 Gr. P12	P	0.15	0.50	0.30-0.61	0.045	0.055	-
		A387 Gr. 12	PL	0.17	0.13-0.32	0.36-0.69	0.035	0.040	-
	WP11	A335 Gr. P11	P	0.15	0.50-1.00	0.30-0.60	0.030	0.030	-
		A387 Gr. 11	PL	0.17	0.44-0.86	0.36-0.69	0.035	0.040	-
	WP22	A335 Gr. P22	P	0.15	0.50	0.30-0.60	0.030	0.030	-
		A387 Gr. 22	PL	0.15-0.17	0.50	0.27-0.63	0.035	0.035	-
	WP5	A335 Gr. P5	P	0.15	0.50	0.30-0.60	0.030	0.030	-
		A387 Gr. 5	PL	0.15	0.50	0.27-0.63	0.040	0.030	-
	WP9	A335 Gr. 9	P	0.15	0.25-1.00	0.30-0.60	0.025	0.025	-
		A387 Gr. 9	PL	0.15	1.00	0.30-0.60	0.030	0.030	-
A403	WP304	A312 Gr. TP304	P	0.08	0.75	2.00	0.040	0.030	8.00-11.00
		A240 Type 304	PL	0.15	1.00	2.00	0.045	0.030	8.00-10.05
	WP304H	A312 Gr. TP304H	P	0.14-0.10	0.75	2.00	0.045	0.030	8.00-11.00
		A240 Type 304	PL	0.04-0.10	1.00	2.00	0.045	0.030	8.00-10.05
	WP304L	A312 Gr. TP304L	P	0.035	0.75	2.00	0.040	0.030	8.00-13.00
		A240 Type 304	PL	0.030	1.00	2.00	0.045	0.030	8.00-12.00
	WP309	A312 Gr. TP309	P	0.15	0.75	2.00	0.040	0.030	12.00-15.00
		A240 Type 309S	PL	0.08	1.00	2.00	0.045	0.030	12.00-15.00
	WP310	A312 Gr. TP10	P	0.15	0.75	2.00	0.040	0.030	19.00-22.00
		A240 Type 310S	PL	0.08	1.00	2.00	0.045	0.030	19.00-22.00
	WP316	A312 Gr. TP316	P	0.08	0.75	2.00	0.040	0.030	11.00-14.00
		A240 Type 316	PL	0.08	1.00	2.00	0.045	0.030	10.00-14.00
	WP316H	A312 Gr. TP316H	P	0.04-0.10	0.75	2.00	0.040	0.030	11.00-14.00
		A240 Type 316H*	PL	0.04-0.10	1.00	2.00	0.045	0.030	10.00-14.00
	WP316L	A312 Gr. TP316L	P	0.035	0.75	2.00	0.040	0.030	10.00-15.00
		A240 Type 316L	PL	0.030	1.00	2.00	0.045	0.035	10.00-14.00
	WP317L	A312 Gr. TP317L	P	0.035	0.75	2.00	0.040	0.030	11.00-15.00
		A240 Type 317L	PL	0.030	0.75	2.00	0.045	0.030	11.00-15.00
	WP321	A312 Gr. TP321	P	0.08	0.75	2.00	0.040	0.030	9.00-13.00
		A240 Type 321	PL	0.08	1.00	2.00	0.045	0.030	9.00-12.00
	WP321H	A312 Gr. TP321H	P	0.04-0.10	0.75	2.00	0.040	0.030	9.00-13.00
		A240 Type 321H*	PL	0.04-0.10	1.00	2.00	0.045	0.030	9.00-12.00
	WP347	A312 Gr. TP347	P	0.08	0.75	2.00	0.040	0.030	9.00-13.00
		A240 Type 347	PL	0.08	1.00	2.00	0.045	0.035	9.00-13.00
	WP347H	A312 Gr. TP347H	P	0.04-0.10	0.75	2.00	0.040	0.030	9.00-13.00
		A240 Type 347H*	PL	0.08	1.00	2.00	0.045	0.030	9.00-13.00
A420	WPL6	A333 and A334 Gr.6	P	0.30	0.10 Min.	0.29-1.06	0.048	0.058	-
		A516 Gr. 60	PL	0.21-0.27	0.13-0.33	0.60-1.25	0.035	0.040	-
	WPL3	A333 and A334 Gr.3	P	0.19	0.18-0.37	0.31-0.64	0.050	0.050	3.18-3.82
		A203 Gr. D	PL	0.17-0.20	0.13-0.32	0.70-0.80	0.035	0.040	3.18-3.82
	WPL8	A333 and A334 Gr.8	P	0.20	-	0.40-1.06	0.025	0.025	1.60-2.24
		A203 Gr. A	PL	0.17	0.15-0.40	0.70	0.035	0.040	2.10-2.50

- Asterisks(*) denote that the carbon content shall be 0.04 to 0.10% Daggers(+) denote that the minimum tensile strength shall be 65,000 psi (488 MPa, and that the minimum yield stength shall be 25,000 psi (172 MPa).
- The yield strength shall be detemined by the offset method at 0.2% limiting perminent set in accordance with ASTM A370 Specification. An alternative method of determining yield strength may be based on a total extension under load of 0.5%
- The basic minimum elongation for walls 3/16(7.94mm) and over in thickness shall be determined according to strip tests; all small sizes are tested in their full section.
- P denotes Pipe, PL Plate.

Chemical Composition (Percent)			Other Elements	Mechanical				Marking Strength
Max. or Range (Unless otherwise indicated)				Tensile Strength Min. or Range Ksi (Mpa)		Yield Strength Min. Ksi (Mpa)	Longitudinal Elongation in 2 in (50mm) Min. %	
Cr	Mo	Ti						
-	-	-	-	60	(414)	35(241)	25	WPB
-	-	-	-	65-85	(450-585)	35(240)	23	
-	-	-	-	70-90	(485-620)	38(260)	21	
-	-	-	-	70	(483)	40(276)	30	WPC
-	0.44-0.65	-	-	55	(379)	30(207)	30	WP1
-	0.41-0.64	-	-	70-90	(485-620)	40(275)	22	
0.08-1.25		-	-	60	(414)	30(207)	30	WP12
0.74-1.21	0.40-0.65	-	-	56-80	(380-550)	33(230)	22	
1.00-1.50	0.40-0.65	-	-	60	(414)	30(207)	30	WP11
0.94-1.56	0.40-0.70	-	-	60-85	(415-585)	35(240)	22	
1.90-2.62	0.87-1.13	-	-	60	(414)	30(207)	30	WP22
1.88-2.62	0.85-1.15	-	-	60-85	(415-585)	30(205)	18	
4.00-6.00	0.45-0.65	-	-	60	(414)	30(207)	30	WP5
4.00-6.00	0.40-0.70	-	-	60-85	(415-585)	30(205)	18	
8.00-10.00	0.90-1.10	-	-	60	(414)	30(205)	30	WP9
8.00-10.00	0.90-1.10	-	-	60-85	(415-585)	30(205)	18	
18.00-20.00	-	-	-	75	(517)	30(207)	30	WP304
18.00-20.00	-	-	-	75	(515)	30(205)	40	
18.00-20.00	-	-	-	75	(517)	25(172)	35	WP304H
18.00-20.00	-	-	-	75	(515)	25(175)	40	
18.00-20.00	-	-	-	65	(448)	30(207)	30	WP304L
18.00-20.00	-	-	-	65	(448)	30(205)	40	
22.00-24.00	-	-	-	75	(517)	30(207)	30	WP309
22.00-24.00	-	-	-	75	(515)	30(205)	40	
24.00-26.00	-	-	-	75	(517)	30(207)	30	WP310
24.00-26.00	-	-	-	75	(515)	30(205)	40	
16.00-18.00	2.00-3.00	-	-	75	(517)	30(207)	35	WP316
16.00-18.00	2.00-3.00	-	-	75	(515)	30(205)	40	
16.00-18.00	2.00-3.00	-	-	75	(517)	30(207)	35	WP316H
16.00-18.00	2.00-3.00	-	-	75	(515)	30(205)	40	
16.00-18.00	2.00-3.00	-	-	75	(517)	25(172)	35	WP316L
16.00-18.00	2.00-3.00	-	-	75	(515)	25(170)	40	
18.00-20.00	3.00-4.00	-	-	75	(515)	30(205)	35	WP317L
18.00-20.00	3.00-4.00	-	N-0.10	80	(550)	35(240)	40	
17.00-19.00	-	5×C-0.60	-	70	(483)	30(207)	35	WP321
17.00-19.00	-	5×C-0.70	-	65	(448)	30(205)	40	
17.00-20.00	-	4×C-0.60	-	75	(517)	30(207)	35	WP321H
17.00-19.00	-	4×C-0.70	-	75	(515)	30(205)	40	
17.00-20.00	-	-	Cb+Ta10×C-1.00	75	(517)	30(207)	35	WP347
17.00-19.00	-	-	Cb+Ta10×C-1.10	75	(515)	30(205)	40	
17.00-20.00	-	-	Cb+Ta 8×C-1.00	75	(517)	30(207)	30	WP347H
17.00-19.00	-	-	Cb+Ta10×C-1.00	75	(515)	30(205)	40	
-	-	-	-	60	(414)	35(241)	30	WPL6
-	-	-	-	60-80	(145-550)	35(220)	25	
-	-	-	-	65	(448)	35(241)	30	WPL3
-	-	-	-	65-85	(450-585)	37(255)	23	
-	-	-	Cu-0.75-1.02	63	(435)	46(315)	28	WPL8
-	-	-	-	65-85	(450-585)	37(255)	23	

MATERIALS SPECIFICATIONS FOR JIS MATERIALS

Marking Symbol	JIS Code Number & Materials	Chemical Composition (percent)					
		C	Si	Mn	P	S	Ni
SGP	G3452, SGP	-	-	-	0.040 Max.	0.040 Max.	-
PG370	G3454, STPG370	0.25 Max.	0.35 Max.	0.30-0.90	0.040 Max.	0.040 Max.	-
PG410	G3454, STPG410	0.30 Max.	0.35 Max.	0.30-1.00	0.040 Max.	0.040 Max.	-
PT370	G3456, STPT370	0.25 Max.	0.10-0.35	0.30-0.90	0.035 Max.	0.035 Max.	-
PT410	G3456, STPT410	0.30 Max.	0.10-0.35	0.30-1.00	0.035 Max.	0.035 Max.	-
PT480	G3456, STPT480	0.33 Max.	0.10-0.35	0.30-1.00	0.035 Max.	0.035 Max.	-
STS370	G3455, STS370	0.25 Max.	0.10-0.35	0.30-1.10	0.035 Max.	0.035 Max.	-
STS410	G3455, STS410	0.30 Max.	0.10-0.35	0.30-1.40	0.035 Max.	0.035 Max.	-
STS480	G3455, STS480	0.33 Max.	0.10-0.35	0.30-1.50	0.035 Max.	0.035 Max.	-
PY400	G3457, STPY400	-	-	-	0.050 Max.	0.050 Max.	-
SUS304	G3459, SUS304TP	0.08 Max.	1.00 Max.	2.00 Max.	0.040 Max.	0.030 Max.	8.00-11.00
SUS304H	G3459, SUS304HTP	0.04-1.00	0.75 Max.	2.00 Max.	0.040 Max.	0.030 Max.	8.00-11.00
SUS304L	G3459, SUS304LTP	0.03 Max.	1.00 Max.	2.00 Max.	0.040 Max.	0.030 Max.	9.00-13.00
SUS316	G3459, SUS316TP	0.08 Max.	1.00 Max.	2.00 Max.	0.040 Max.	0.030 Max.	10.00-14.00
SUS316H	G3459, SUS316HTP	0.04-0.10	0.75 Max.	2.00 Max.	0.030 Max.	0.030 Max.	11.00-14.00
SUS316L	G3459, SUS316LTP	0.03 Max.	1.00 Max.	2.00 Max.	0.040 Max.	0.030 Max.	12.00-16.00
PL380	G3460, STPL380	0.25 Max.	0.35 Max.	1.35 Max.	0.035 Max.	0.035 Max.	-
PL450	G3460, STPL450	0.18 Max.	0.10-0.35	0.30-0.60	0.030 Max.	0.030 Max.	3.00-3.80
SS400	G3101, SS400	-	-	-	0.050 Max.	0.050 Max.	-
SM400B	G3106, SM400B	0.20 Max.	0.35 Max.	0.60-1.20	0.040 Max.	0.040 Max.	-
SM490B	G3106, SM490B	0.18 Max.	0.55 Max.	1.50 Max.	0.040 Max.	0.040 Max.	-
SB410	G3103, SB410	0.24 Max.	0.15-0.30	0.90 Max.	0.035 Max.	0.040 Max.	-
SB450	G3103, SB450	0.28 Max.	0.15-0.30	0.90 Max.	0.035 Max.	0.040 Max.	-
S20C	G4051, S20C	0.18-0.23	0.15-0.35	0.30-0.60	0.030 Max.	0.035 Max.	-
S25C	G4051, S25C	0.22-0.28	0.15-0.35	0.30-0.60	0.030 Max.	0.035 Max.	-
S45C	G4051, S45C	0.42-0.48	0.15-0.30	0.60-0.90	0.030 Max.	0.035 Max.	-
SF45	G3201, SF45	0.60 Max.	0.15-0.50	0.30-1.20	0.030 Max.	0.035 Max.	-
SF50	G3201, SF50	0.60 Max.	0.15-0.50	0.30-1.20	0.030 Max.	0.035 Max.	-

Chemical Composition (percent)		Mechanical Requirements			Reduction if Area	Hardness (HB)	Marking Symbol
Cr	Mo	Tensile Strength kgf/㎟ (N/㎟)	Yield Strength kgf/㎟ (N/㎟)	Elongation(%) Test Piece No.			
-	-	30 Min. (290) Min.	-	(11.12) 30 Min. (5) 25 Min.	-	-	SGP
-	-	38 Min. (373) Min.	22 Min. (216) Min.	(11.12) 30 Min. (5) 25 Min.	-	-	PG370
-	-	42 Min. (412) Min.	25 Min. (245) Min.	(11.12) 25 Min. (5) 20 Min.	-	-	PG410
-	-	38 Min. (373) Min.	22 Min. (216) Min.	(11.12) 30 Min. (5) 25 Min.	-	-	PT370
-	-	42 Min. (412) Min.	25 Min. (245) Min.	(11.12) 25 Min. (5) 20 Min.	-	-	PT410
-	-	49 Min. (481) Min.	28 Min. (275) Min.	(11.12) 25 Min. (5) 20 Min.	-	-	PT480
-	-	38 Min. (373) Min.	22 Min. (216) Min.	(11.12) 30 Min. (5) 25 Min.	-	-	STS370
-	-	42 Min. (412) Min.	25 Min. (245) Min.	(11.12) 25 Min. (5) 20 Min.	-	-	STS410
-	-	49 Min. (481) Min.	28 Min. (275) Min.	(11.12) 25 Min. (5) 20 Min.	-	-	STS480
-	-	41 Min. (402) Min.	23 Min. (226) Min.	(5) 18 Min.	-	-	PY400
18.00-20.00	-	53 Min. (520) Min.	21 Min. (206) Min.	(11.12) 35 Min. (5) 25 Min.	-	-	SUS304
18.00-20.00	-	53 Min. (520) Min.	21 Min. (206) Min.	(11.12) 35 Min. (5) 25 Min.	-	-	SUS304H
18.00-20.00	-	49 Min. (481) Min.	18 Min. (177) Min.	(11.12) 35 Min. (5) 25 Min.	-	-	SUS304L
16.00-18.00	2.00-3.00	53 Min. (520) Min.	21 Min. (206) Min.	(11.12) 35 Min. (5) 25 Min.	-	-	SUS316
16.00-18.00	2.00-3.00	53 Min. (520) Min.	21 Min. (206) Min.	(11.12) 35 Min. (5) 25 Min.	-	-	SUS316H
16.00-18.00	2.00-3.00	49 Min. (481) Min.	18 Min. (177) Min.	(11.12) 35 Min. (5) 25 Min.	-	-	SUS316L
-	-	39 Min. (382) Min.	21 Min. (206) Min.	(11.12) 35 Min. (5) 25 Min.	-	-	PL380
-	-	46 Min. (451) Min.	25 Min. (245) Min.	(11.12) 30 Min. (5) 20 Min.	-	-	PL450
-	-	41-52 (402-510)	16t Max. 25 Min. (245)	(5) 21 Min. (14) 17 Min.	-	-	SS400
-	-	41-52 (402-510)	16t Max. 25 Min. (245)	(5) 23 Min. (1A) 18 Min.	-	-	SM400B
-	-	50-62 (490-608)	16t Max. 23 Min. (324)	(5) 22 Min. (1A) 17 Min.	-	-	SM490B
-	-	42-56 (412-549)	23 Min. (226) Min.	(1A) 21 Min. (10) 25 Min.	-	-	SB410
-	-	46-60 Min. (415-588)	25 Min. (245) Min.	(1A) 19 Min. (10) 23 Min.	-	-	SB450
-	-	41 Min. (402) Min.	(N) 25 Min. (245) Min.	28 Min.	-	116-174	S20C
-	-	45 Min. (441) Min.	(N) 27 Min. (265) Min.	27 Min.	-	123-183	S25C
-	-	58 Min. (569) Min.	(N) 35 Min. (343) Min.	20 Min.	-	167-227	S45C
-	-	45-55 (444-539)	(N) 23 Min. (226) Min.	(14A)(A) 24 Min. (T) 19 Min.	(A) 45 (T) 35	121 Min.	SF45
-	-	50-60 (490-588)	(N) 25 Min. (245) Min.	(14A)(A) 22 Min. (T) 17 Min.	(A) 40 (T) 30	134 Min.	SF50

VIETNAM

JINIL BEND VINA CO., LTD.

Address: No. 21, Road 3, VSIP II, Hoa Phu Ward, Thu Dau Mot City,
Binh Duong Province, Viet Nam
Tel : +84-274-3635-070~4 Fax : +84-274-3635-075

JINIL BEND CO., LTD.
Head Office & Factory:
Address: (Songjeong-dong) Noksansandan 161ro 20
Gangseo-gu, Busan, Korea
T +82.51.832.1919/ +82.51832.1988~9
F +82.51.832.1990/ 714.0820/ 715.0821

www.jinilbendvina.com

02.2019